EcoStruxure
Innovation At Every Level

Pact Series

MasterPact™ MTZ

Catalog 2019
Air circuit breakers
and switch-disconnectors

Life Is On | Schneider Electric

Same technology, same offer, simpler names

We're making it easier for you to navigate across the wide range of our world-class digital offerings and select with confidence the offers that are right for you and your needs.

EcoStruxure Architecture

To enable brand consistency, relevance and impact, we are reinforcing our EcoStruxure™ architecture and digital customer lifecycle tools to ensure a seamless experience from the CAPEX to OPEX phases of each project, bridging our entire ecosystem of partners, services providers and end users.

EcoStruxure is our IoT-enabled open and interoperable system architecture and platform. EcoStruxure delivers enhanced values around safety, reliability, efficiency, sustainability and connectivity for our customers. EcoStruxure leverages advancements in IoT, mobility, sensing, cloud, analytics, and cybersecurity technologies to deliver Innovation At Every Level from Connected Products; Edge Control; and Apps, Analytics & Services: our IoT technology Levels.

Old names	New names
Ecodial	EcoStruxure Power Design
Ecoreal	EcoStruxure Power Build
Ecoreach	EcoStruxure Power Commission
Masterpact MTZ mobile App	EcoStruxure Power Device App

MasterPact MTZ and the Pact Series

Future-proof your installation with Schneider Electric's low and medium voltage Pact Series. Built on legendary Schneider Electric innovation, the Pact Series comprises world-class circuit breakers, switches, residual current devices and fuses, for all standard and specific applications. Experience robust performance with this comprehensive range of EcoStruxure-ready switchgear, for all applications from 16 to 6300A.

Building on the strengths of the Pact Series, MasterPact MTZ is the next generation of high power low voltage circuit breakers, designed to protect electrical systems from damage caused by overloads, short circuits and equipment ground faults. MasterPact MTZ embeds advanced digital technologies and MicroLogic X control units helping to contribute to safety and energy efficiency, and keeping you future-ready.

Old names	New names
Compact	ComPact
Masterpact	MasterPact
Micrologic	MicroLogic
Transferpact	TransferPact
Fupact	FuPact

ESC
Wireless mode
To connect, place in front of the screen
Press to activate
Schneider Electric
TRIP CAUSE
6.0 X
ID:
1989421603210024LV847603
Voltage Power Supply
CAUTION ATTENTION
PRECAUCION
DISCONNECT BEFORE DIELECTRIC TEST
DECONNECTER AVANT TEST DIELECTRIQUE
DESCONECTARSE ANTES PRUEBA DIELECTRICA
Ue max =
600 Vac
Uimp = 8 Kv
VPS

Bringing IoT innovation to power distribution

For the Internet of Things era, EcoStruxure™ Power is the trusted and secure platform for developing safe, highly available, energy-efficient electrical distribution systems. And MasterPact™ MTZ air circuit breakers have EcoStruxure innovation built in. Scalability, durability, and connectivity come together to create a seamless and flexible circuit breaker that actively helps you save time, increase efficiency, and improve energy consumption.

Since 1987, MasterPact circuit breakers have established a legendary reputation. And now, MasterPact MTZ circuit breakers build upon that legacy with the innovation you need today to build the power distribution systems of tomorrow.

Buildings, industry, and energy

40%

AMOUNT OF AVAILABLE ENERGY CONSUMED BY BUILDINGS WORLDWIDE[1]

+50%

LEVEL OF INCREASE IN GLOBAL INDUSTRY ENERGY DEMAND BY 2050[2]

50
BILLION

NUMBER OF SMART, CONNECTED DEVICES BY 2020[3]

100%

EXPECTED UPTIME FOR BUILDINGS WORLDWIDE

1 UN Report: World Urbanization Prospects, 2014
2 UN Report: Global Industrial Energy Efficiency Benchmarking, 2010
3 Cisco White Paper: The Internet of Things: How the Next Evolution of the Internet Is Changing Everything, 2011

Help to improve safety, offer greater cybersecurity, and make your power distribution system more reliable, efficient, and sustainable.

Building investors want

- Short but reliable project lead times
- Flexible and scalable investments
- Valuable energy labels and ratings
- Compliance to building codes and regulations

Building tenants want

- Full power availability
- Energy expense optimization
- Tight control of maintenance costs
- Occupant comfort and productivity

Facility managers want

- To provide high-quality service
- To keep electrical system efficient
- To stay connected and act remotely
- To restore power quickly in case of an outage

NOW, YOU'RE READY...

Built on the legendary performance and reliability of the MasterPact range.

MasterPact MTZ circuit breakers prepare you for the future of power distribution with smart connectivity, remote monitoring, and easy customization via digital modules.

- Intuitive EcoStruxure Power Device App smartphone app for easy operation and maintenance
- Precise Class 1 power meter built in for energy-saving capabilities
- Easy customization with digital modules
- Intuitive MicroLogic™ X control unit
- Easy installation using established architectures
- Seamless integration with building and energy management systems with EcoStruxure architectures
- Designed and tested to applicable standards for ANSI, UL, and IEC
- Low migration cost from MasterPact NT/NW to MasterPact MTZ

With MasterPact MTZ breakers, enhanced performance and connectivity equip you for the future of power distribution.

Available from 630 A to 6300 A.

...CONNECTIVITY READY

Stay connected and avoid downtime with the Ecostruxure Power Device App app and EcoStruxure software.

One unified smartphone app

- Within the palm of your hand you can be connected to your:
  - MasterPact MTZ air circuit breakers
  - TeSys GV4 monitor circuit breakers
  - Easergy P3 protection relays
  - ...and more.
- With Ecostruxure Power Device App app you have access to your devices' information and can perform control operations right from your smartphone.

Secure wireless notifications locally

- Perform control operations with your smartphone
- Monitor electrical data: currents and voltages, energy consumption, power quality, phase balance and harmonics
- Restore power quickly and easily using guidance from digital modules; Power Restoration Assistant and MasterPact Operation Assistant

Notifications and collaboration remotely

- Receive maintenance reminders and real-time alerts wherever you are: periodic inspection and alarms
- Access saved details of events: data and documents, self-diagnosis, event type, severity level, time stamp
- Supervise remotely and collaborate in real-time with your coworkers using EcoStruxure Power software and services:
  - EcoStruxure Facility Expert
  - EcoStruxure Facility Advisor
  - Power Monitoring Expert
  - Power SCADA Operation
  - Building Operation
- Share circuit breaker data remotely with experts and management systems

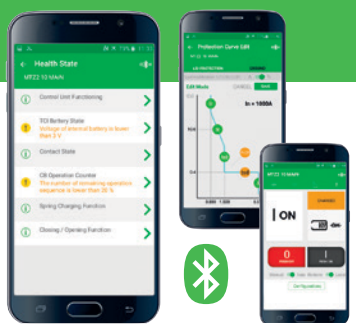

Available on the App Store

Get it on Google play

Android

iOS

...PRECISION READY

Access new energy-saving capabilities — A certified Class 1 power meter gives you precise power measurements for greater efficiency.

- First air circuit breaker with built-in, third-party-certified Class 1 active power meter (IEC 61557-12)
- Instant and comprehensive views of your building's power consumption
- An easy, time-saving way to add energy measurement to your system
- Instant access to power consumption data — no need to wait for software or run analytics
- View energy usage analysis, trends, and energy costs allocation
- Compliant with international energy-efficiency regulations: ISO 50001 and IEC 60364-8

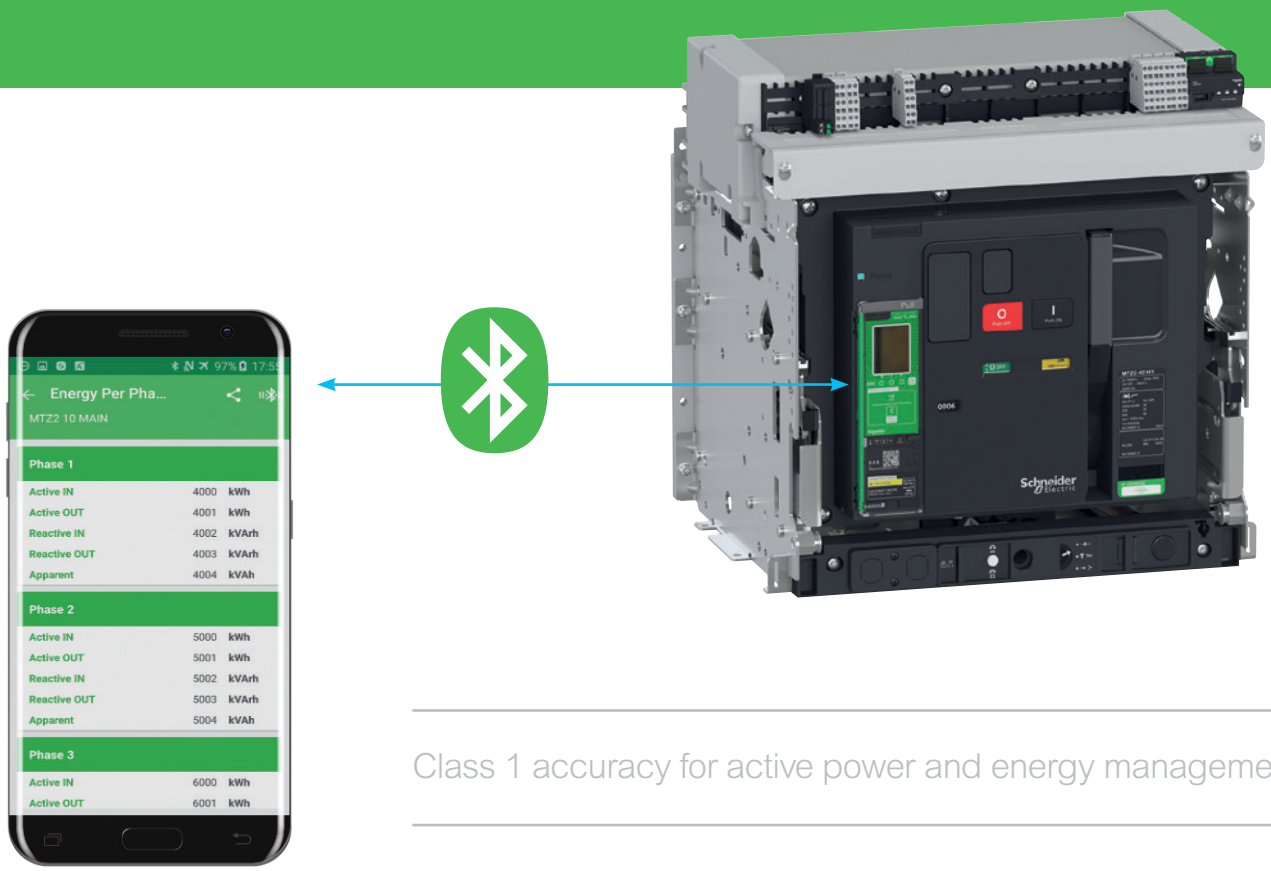

Class 1 accuracy for active power and energy management.

...UPGRADE READY

Customize MicroLogic X control unit anytime — Digital modules make it easy to upgrade and tailor your system.

- Upload additional digital modules for advanced functions: system protection, measurement, maintenance and diagnostics.
- Enhance energy management, power quality management, and power outage management
- Update at any stage of the life cycle: during configuration, commissioning, or operation
- Digital modules available 24/7 on the Schneider Electric GoDigital store
- Upload modules without interrupting power, using EcoStruxure Power Commission software and a USB cable

Digital modules

- **Protection:** Energy Reduction Maintenance Settings, Ground-fault alarm, Under/Over voltage protection, Under/Over frequency protection, Reverse active power protection
- **Measurement:** Energy per phase, Individual harmonics analysis
- **Maintenance & Diagnostics:** Power restoration assistant, MasterPact operation assistant, Wave form capture on trip event, Modbus legacy dataset

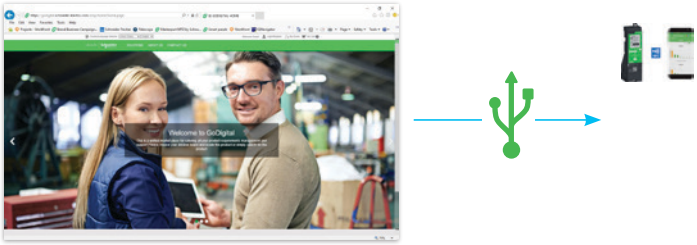

GoDigital Store

Customize your MicroLogic 24/7 with optional digital modules

...INSTALLATION READY

Streamline configuration and commissioning.

Retrofit seamlessly

- Updating from MasterPact NT/NW breakers is easy and cost-efficient
- MasterPact MTZ circuit breakers have the same electrical performance, breaking capacity, thermal properties, power connection in the same frame size
- No recertification is required

Configure quickly

- Designing your MasterPact MTZ breaker to fit your needs is simple
- Product Selector online tool makes configuration and ordering quick and convenient

Commission easily

- EcoStruxure Power Commission software reduces commissioning time and simplifies maintenance:
  - Set up and test switchboards equipped with smart devices
  - Install digital modules
  - Speed up FAT and SAT delivery
  - Improve preventive maintenance with alerts and easy access to data

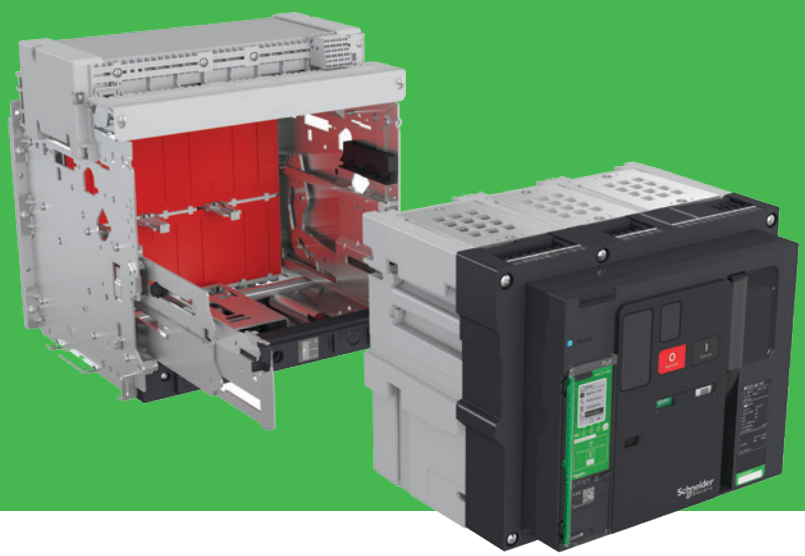

Installation and updates are seamless, quick, and easy.

...INTEGRATION READY

Simplify your switchboard operation — MasterPact MTZ circuit breakers are adaptable to different systems because of their digital capabilities.

- Integrate seamlessly with EcoStruxure Power architectures
- Monitor and control remotely using any supervision system
- Embedded Ethernet connection (EIFE module) with drawout cradle (chassis) status management and embedded web pages
- Breaker data displays locally on switchboard and remotely on EcoStruxure Power supervision systems
- Fully customizable MicroLogic X control units for all types of protection

EcoStruxure Power software and services

- Facility Expert
- Facility Advisor
- Power Monitoring Expert
- Power SCADA Operation
- Building Operation

EcoStruxure ready

MasterPact MTZ circuit breakers integration with EcoStruxure Power architecture generates valuable data, enabling:

- Connection to EcoStruxure Power software to unlock your electrical system's potential
- Remote monitoring and control with any supervision system to carry out predictive and preventive maintenance
- Remote notifications and maintenance planning with Facility Expert digital maintenance logbook
- Proactive facility management with EcoStruxure Facility Advisor, Power Monitoring Expert, Power SCADA Operation, and Building Operation software
- Asset life-cycle management and condition-based maintenance via equipment monitoring
- Asset and alarm management
- Energy efficiency and power quality management
- Compliance with latest regulations for energy-efficient buildings

PROTECT
Electrical protection is at the core of Smart Panels.

MEASURE
Certified Class 1 energy
And circuit breaker status

CONNECT
Embedded
Ethernet connection

ACT
Comprehensive
data collection

se.com/ecostruxure-power

A new digital user experience

With the MasterPact MTZ circuit breaker, every stage of the project — from designing and configuring to operating and maintaining — is streamlined using its digital capabilities.

DESIGN

EcoStruxure Power Design software
Single-line diagram design software that calculates and sizes your electrical installation.

EcoStruxure Power Build software
Quick configuration and quotation tool for switchboards.

CONFIGURE AND ORDER

Product Selector
Configure MasterPact MTZ to save time and ensure accuracy.

MySE
Order your MasterPact MTZ online

BUILD AND COMMISSION

EcoStruxure Power Commision software
Commission and upgrade easily with protection setting and factory-acceptance test.

Monitor with EcoStruxure Power software
Obtain data visualization and reporting for increased efficiency.

OPERATE AND MAINTAIN

Remote, continuous notifications

The Facility Expert maintenance logbook app.

Track facility data and receive alerts in case of power events and scheduled maintenance.

schneider-electric.com/ecostruxure-facility-expert

Operate with your smartphone

Locally in the facility room

NFC

Ecostruxure Power Device App

Android iOS

EcoStruxure Power monitoring software

Power Monitoring Expert
Power SCADA Operation
Building Operation
Facility Advisor

schneider-electric.com/ecostruxure-facility-advisor

Operate with MicroLogic X control unit

Locally in the facility room

Status "at a glance"

CUSTOMIZE OR UPGRADE

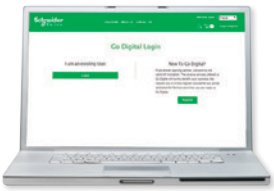

GoDigital store
Purchase additional digital modules for even more visibility and efficiency over the MasterPact MTZ circuit breaker life cycle.

godigital.schneider-electric.com

...ENVIRONMENT READY

Keep your electrical system online even in harsh environments — MasterPact MTZ circuit breakers give you proven reliability by going beyond standards.

Built to endure:

- Voltage fluctuations
- Electromagnetic disturbances
- Vibrations and mechanical shocks
- Corrosive and chemical atmospheres
- Severe temperatures

...SUSTAINABILITY READY

Contribute to a better world — with MasterPact MTZ circuit breakers you can enhance sustainability.

Build superior sustainable and efficient properties by reducing CO_2 emissions, utility and operating costs as well as improving the well-being of property occupants for both new construction and renovation projects.

Green Premium™

Experience the difference today at schneider-electric.com/green-premium

Achieve Green Building certification with MasterPact MTZ:

In compliance with ISO 14025 PEP Ecopassport program, Schneider Electric publishes a comprehensive Life Cycle Analysis of our product, providing the environmental data you need to achieve Green Building certifications.

For example, MasterPact MTZ contributes to 4 LEED™ points:

- Building Product Disclosure and Optimization
- Advanced Energy Metering

Circular performance | Resource performance | Well-being performance

With the addition of digital modules, the circuit breaker can be upgraded and modernized at any time after installation without disrupting electrical service.

Better durability with improved mechanical and electrical performance along with remote monitoring to help facilitate predictive maintenance.

The embedded class 1 metering allows active power and energy to be monitored, helping facility managers reduce their CO_2 emissions and energy costs when connected to any building and energy management system.

MasterPact MTZ is fully RoHS and REACH compliant.

Innovation at every level

Whether you're a panel builder, OEM, contractor, or facility manager, MasterPact MTZ circuit breakers offer the innovative features you need to streamline system design, construction, and operation.

I design

Win more projects

Digital modules give you the ability to add functions based on one standard MicroLogic X control unit, helping to reduce your initial investment in a project and making MasterPact MTZ circuit breakers scalable to future needs.

Design durable and compliant systems

MasterPact MTZ circuit breakers are compliant with electrical distribution and energy efficiency standards and regulations. Plus, they are tested and proven to withstand harsh conditions.

Create smart, flexible systems

MasterPact MTZ circuit breakers integrate seamlessly with EcoStruxure Power architectures. The embedded Ethernet connection and a Class 1 power meter help to increase energy efficiency by providing comprehensive data on any building or power management system.

I build

Install and retrofit easily

The transition from MasterPact NT/NW to MasterPact MTZ air circuit breakers merges installation ready design with future ready evolutions in smart connectivity, remote monitoring and easy customization. It doesn't require switchboard modification or IEC 61439-1 and -2 recertification.

Commission quickly

With EcoStruxure Power Commission software, you can integrate smart devices, commission connected switchboards, and generate comprehensive reports as part of factory and site acceptance tests.

Provide better service

Our partner programs offer tools, software, support, and loyalty awards to help you grow your business and meet your customers' needs with high-quality pre- and post-sale services.

I operate

Improve customer loyalty

MasterPact MTZ circuit breakers allow you to provide commissioning and maintenance reports to demonstrate your reliability and value to your customers or employer.

Make maintenance easier

MasterPact MTZ circuit breakers send alerts to your smartphone, helping you to diagnose problems quickly and avoid downtime.
In case of a power outage, the Power Restoration Assistant digital module guides you to the root cause and helps you restore power quickly.

Increase safety

Because MasterPact MTZ circuit breakers can be operated remotely via Bluetooth, operations can occur outside of the arc flash zone. Plus, NFC allows access to stored breaker data even when the power is off.

Masterpact
Reset
R
Pull
MICROLOGIC

Offer more services and get experienced support

With smart connectivity, MasterPact MTZ circuit breakers give you the ability to offer better service and insights. And our Field Services team is always ready with experienced support when you need it.

Digital Services

Data analysis and reporting assists you with network and cost management. Remote monitoring helps to increase operational efficiency and uptime. Plus, when combined with EcoStruxure Power architectures, MasterPact MTZ air circuit breakers can generate remote data collection, enabling:

- Maintenance planning with Facility Expert
- Facility management with Facility Advisor
- Permanent equipment monitoring
- Asset and alarm management
- Energy efficiency and power quality management

Get peace of mind

MasterPact MTZ associated services are available when purchasing your circuit breaker, such as assistance in commissioning and start-up, warranty extension, and an e-learning program.

Field Services

We're here to help with new projects, retrofitting, maintenance, spare parts kits, and trainings. Manage your MasterPact MTZ circuit breaker throughout its entire life cycle with Schneider Electric Field Services.

Our professional engineers and qualified field services representatives are committed to providing you with innovative solutions, advanced customer service, and technical support.

The MasterPact MTZ range covers your protection needs.

Five performance levels

N1 | H1 | H2 | H3 | L1

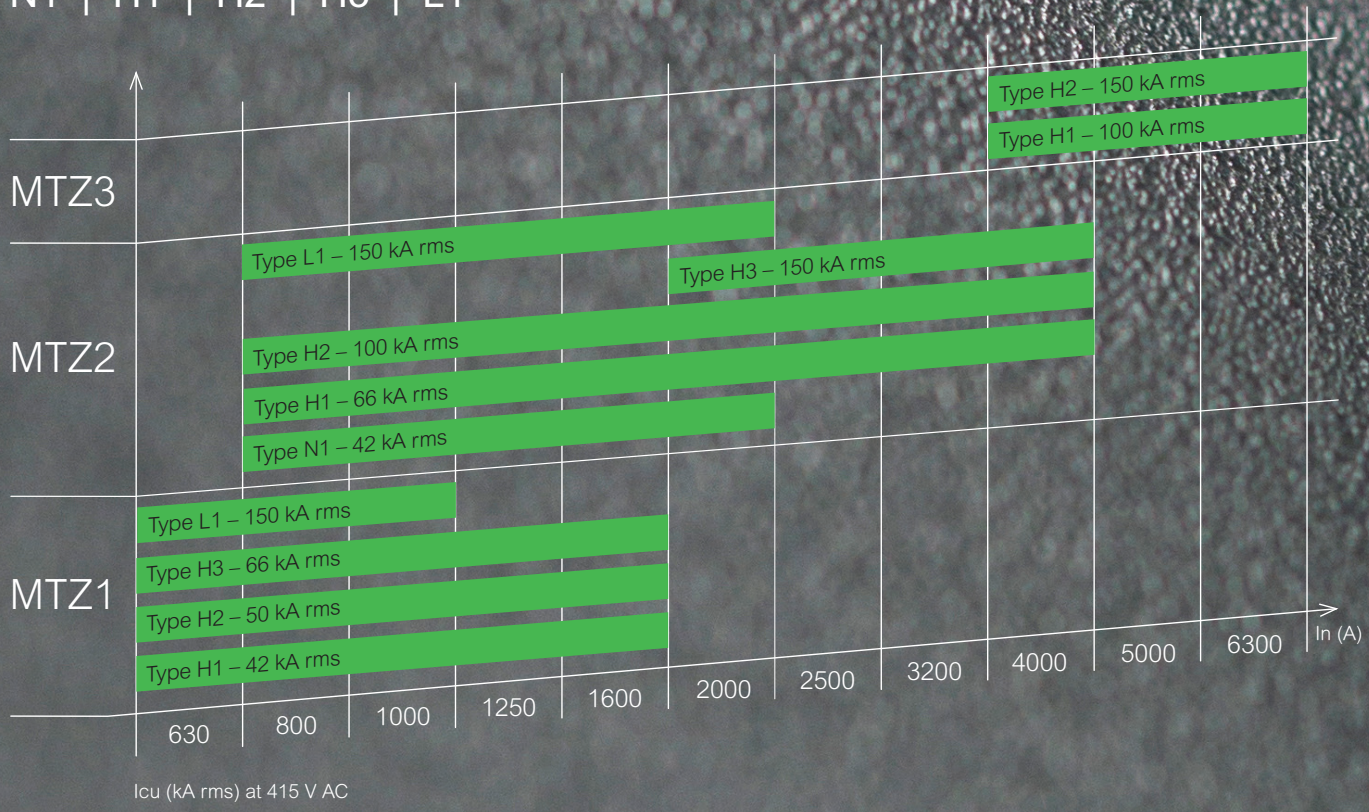

...FUTURE READY

With MasterPact MTZ air circuit breakers, you're ready for all the ways power distribution is changing. Smart connectivity gives you real-time data to help avoid downtime. Digital modules allow you to customize the circuit breaker to your specific needs. And proven durability gives you the assurance that you're placing your power distribution on a reliable foundation.

MasterPact MTZ circuit breakers are available in three sizes:

MTZ1
From 630 to 1600 A

MTZ2
From 800 to 4000 A

MTZ3
From 4000 to 6300 A

Now featuring digital modules to customize MicroLogic X control units

2.0 X (LI) | 5.0 X (LSI) | 6.0 X (LSIG) | 7.0 X (LSIV)

Downloadable digital modules provide enhanced:

- **Protection:** Energy Reduction Maintenance Settings, Ground fault alarm, Under/Over voltage protection, Under/Over frequency protection, Reverse active power protection
- **Measurement:** Energy per phase, Individual harmonics analysis
- **Maintenance & Diagnostics:** Power restoration assistant, MasterPact operation assistant, Wave form capture on trip event, Modbus legacy dataset

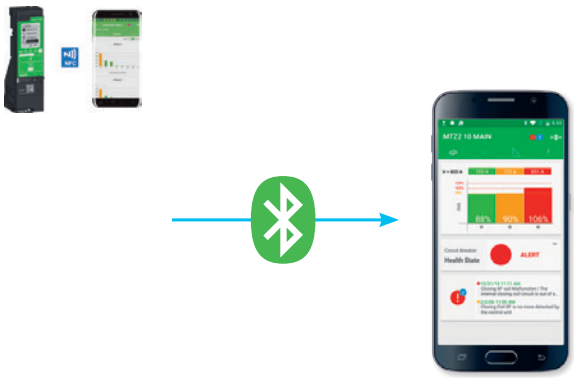

Same technology, same offer, simpler names

We're making it easier for you to navigate across the wide range of our world-class digital offerings and select with confidence the offers that are right for you and your needs.

EcoStruxure Architecture

To enable brand consistency, relevance and impact, we are reinforcing our EcoStruxure™ architecture and digital customer lifecycle tools to ensure a seamless experience from the CAPEX to OPEX phases of each project, bridging our entire ecosystem of partners, services providers and end users.

EcoStruxure is our IoT-enabled open and interoperable system architecture and platform. EcoStruxure delivers enhanced values around safety, reliability, efficiency, sustainability and connectivity for our customers. EcoStruxure leverages advancements in IoT, mobility, sensing, cloud, analytics, and cybersecurity technologies to deliver Innovation At Every Level from Connected Products; Edge Control; and Apps, Analytics & Services: our IoT technology Levels.

Old names	New names
Ecodial	EcoStruxure Power Design
Ecoreal	EcoStruxure Power Build
Ecoreach	EcoStruxure Power Commission
Masterpact MTZ mobile App	Ecostruxure Power Device App

MasterPact MTZ and the Pact Series

Future-proof your installation with Schneider Electric's low and medium voltage Pact Series. Built on legendary Schneider Electric innovation, the Pact Series comprises world-class circuit breakers, switches, residual current devices and fuses, for all standard and specific applications. Experience robust performance with this comprehensive range of EcoStruxure-ready switchgear, for all applications from 16 to 6300A.

Building on the strengths of the Pact Series, MasterPact MTZ is the next generation of high power low voltage circuit breakers, designed to protect electrical systems from damage caused by overloads, short circuits and equipment ground faults. MasterPact MTZ embeds advanced digital technologies and MicroLogic X control units helping to contribute to safety and energy efficiency, and keeping you future-ready.

Old names	New names
Compact	ComPact
Masterpact	MasterPact
Micrologic	MicroLogic
Transferpact	TransferPact
Fupact	FuPact

General contents

MasterPact™ MTZ

Select your circuit breakers and switch-disconnectors
Characteristics and performances

A

Select your MicroLogic X control unit
Overview of functions

B

Customize your MicroLogic X with digital modules
Overview of digital modules

C

Customize your circuit breaker with accessories
Overview, Installation simplification, Signalling, Controlling, Interlocking, Circuit protection, Operation protection, Mechanical protection, Power availability and reliability

D

Integrate in Smart panels - Architecture and systems
Architecture overview, Components, Customer engineering tool

E

Integrate in switchboard
Operating conditions, Installation rules, Temperature derating, Busbar sizing, Derating in switchboards, Dimensions, Electrical diagrams

F

Integrate in special applications - Source-changeover systems

G

Services
Services Overview, Associated Services, Life Cycle Services, Digital Services

H

Order your circuit breaker
Catalog numbers, Spare parts & Product selector

I

A

Select your circuit breakers and switch-disconnectors

A

Selection guide
Circuit breakers A-2
Switch-disconnectors A-4

Characteristics and performance
Circuit breakers A-6
Switch-disconnectors A-8

Utilisation category A-10

Other chapters
Select your MicroLogic X control unit B-1
Customize your MicroLogic X with digital modules C-1
Customize your circuit breaker with accessories D-1
Integrate in Smart panels - Architecture and systems E-1
Integrate in switchboard F-1
Integrate in special applications - Source-changeover systems G-1
Services H-1
Order your circuit breaker I-1

Selection guide
Circuit breakers

A

Selection criteria

Safety of operation

MasterPact MTZ front face provides reinforced insulation (Class 2) according to IEC 60664-1. It allows Class 2 installation with breaker control from outside.

MasterPact **MTZ1**
From 630 to 1600 A

	Type	H1	H2	H3 [8]	L1
Rated current (A) at 40/50 °C [1]	**MTZ1 06**	630	630	630	630
	MTZ1 08	800	800	800	800
	MTZ1 10	1000	1000	1000	1000
	MTZ1 12	1250	1250	1250	
	MTZ1 16	1600	1600	1600	
Selectivity category [2]		B	B	B	A
Ultimate breaking capacity V AC 50/60 Hz — Icu (kA rms) at 440 V		42	50	66	130
Ultimate breaking capacity V AC 50/60 Hz — Icu (kA rms) at 1150 V		-	-	-	-
Rated service breaking capacity — Ics (kA rms) at 440 V		42	50	50	130
Rated service breaking capacity — Ics (kA rms) at 1150 V		-	-	-	-
Rated short-time withstand current V AC 50/60 Hz — Icw (kA rms) 0.5 s		42	42	50	10
Rated short-time withstand current V AC 50/60 Hz — Icw (kA rms) 1 s		42	42	50	-
Rated short-time withstand current V AC 50/60 Hz — Icw (kA rms) 3 s		24	24	30	-
Compliant with IEC /EN 60947-2 Annex H		Yes	Yes	Yes	Yes
Position of neutral (Left: L, Right: R)		L	L	L	L
Type of control unit: MicroLogic X		◉	◉	◉	◉

Installation characteristics

Type	H1	H2	H3	L1
Connection				
Drawout, front	◉	◉	◉	◉
Drawout, rear	◉	◉	◉	◉
Fixed, front	◉	◉	◉	◉
Fixed, rear	◉	◉	◉	◉

Dimensions (mm) H x W x D	
Drawout 3P	322 x 288 x 291
Drawout 4P	322 x 358 x 291
Fixed 3P	301 x 276 x 209
Fixed 4P	301 x 346 x 209
Weight (kg) approximate	
Drawout 3P/4P	30/39
Fixed 3P/4P	14/18

[1] 50 °C for rear vertical connected only, refer to temperature derating tables for other connection types.
[2] For details on selectivity category A and B, see page A-10.
[3] No front connection for 4000 A.
[4] No horizontal rear connection for 6300 A.
[5] To be specified when ordering.
[6] MTZ2-H10 dedicated to 1250 V systems.
[7] For MasterPact MTZ2-H10 circuit breaker the MicroLogic X control unit cannot be directly connected to the internal voltage pick-up on the downstream terminal. The external voltage pick-up option PTE associated with external voltage transformer shall be used (See page B-28).
[8] For MasterPact MTZ1 H3 the rated operational voltage is limited to 440 V AC - 50/60 Hz.

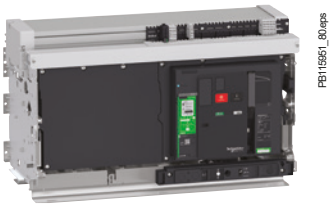

MasterPact MTZ2
From 800 to 4000 A

MasterPact MTZ3
From 4000 to 6300 A

Type	N1	H1		H2		H3	L1	H10 [6]	Type	H1	H2
MTZ2 08	800	800		800			800	800			
MTZ2 10	1000	1000		1000			1000	1000			
MTZ2 12	1250	1250		1250			1250	1250			
MTZ2 16	1600	1600		1600			1600	1600			
MTZ2 20	2000	2000			2000	2000	2000	2000			
MTZ2 25			2500		2500	2500		2500			
MTZ2 32			3200		3200	3200		3200			
MTZ2 40			4000		4000	4000		4000	**MTZ3 40**	4000	4000
									MTZ3 50	5000	5000
									MTZ3 63	6300	6300
	B	B		B		B	B	B		B	B
	42	66		100		150	150	-		100	150
	-	-		-		-	-	50		-	-
	42	66		100		150	150	-		100	150
	-	-		-		-	-	50		-	-
	42	66	66	85	85	65	30	50		100	100
	42	66	66	85	85	65	30	50		100	100
	22	36	66	50	75	65	30	50		100	100
	Yes	Yes		Yes		Yes	Yes	No		Yes	Yes
	L	L or R [5]		L or R [5]		L	L	L		L or R [5]	L or R [5]
	●	●		●		●	●	● [7]		●	●

	N1	H1	H2	H3	L1	H10	H1	H2
	●	● [3]	● [3]	● [3]	●		○	○
	●	●	●	●	●	●	● [4]	● [4]
	●	● [3]	● [3]	○	○		○	○
	●	●	●	○	○		● [4]	● [4]
	439 x 441 x 403						479 x 786 x 403	
	439 x 556 x 403						479 x 1016 x 403	
	352 x 422 x 300						352 x 767 x 300	
	352 x 537 x 300						352 x 997 x 300	
	90/120						225/300	
	50/65						120/160	

Selection guide
Switch-disconnectors

A

Selection criteria

Safety of operation

MasterPact MTZ front face provides reinforced insulation (Class 2) according to IEC 60664-1.
It allows Class 2 installation with breaker control from outside.

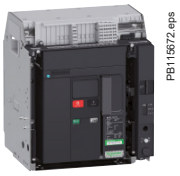

MasterPact MTZ1
From 630 to 1600 A

Type			Type	HA
Rated current (A) at 40/50 °C [1]			**MTZ1 06**	630
			MTZ1 08	800
			MTZ1 10	1000
			MTZ1 12	1250
			MTZ1 16	1600
Switch-disconnector (as per IEC/EN 60947-3)				
Rated making capacity V AC 50/60 Hz	Icm (kÂ)	at 690 V		75
		at 1150 V		-
Rated short-time withstand current V AC 50/60 Hz	Icw (kA rms)	1 s		36
Utilisation category [2]				AC-23A
Unprotected circuit breaker (tripping by shunt trip as per IEC/EN 60947-2)				
External protection relay: short-circuit protection, maximum delay: 400 ms [2]				
Ultimate breaking capacity V AC 50/60 Hz	Icu (kA rms) at 415 V			-
Rated service breaking capacity	Ics (kA rms) % Icu			-
Rated short-time withstand current V AC 50/60 Hz	Icw (kA rms)	1 s		-
		3 s		-
Rated making capacity V AC 50/60 Hz	Icm (kÂ) at 220 to 690 V			
Position of neutral (Left: L, Right: R)				L or R

Installation characteristics

Type	HA
Connection	
Drawout, front	●
Drawout, rear	●
Fixed, front	●
Fixed, rear	●
Dimensions (mm) H x W x D	
Drawout 3P	322 x 288 x 291
Drawout 4P	322 x 358 x 291
Fixed 3P	301 x 276 x 209
Fixed 4P	301 x 346 x 209
Weight (kg) approximate	
Drawout 3P/4P	30/39
Fixed 3P/4P	14/18

[1] 50 °C for rear vertical connected only, refer to temperature derating tables for other connection types.
[2] For details on unprotected circuit breaker and utilisation category AC-23A, see page A-10.
[3] No front connection for 4000 A.
[4] No horizontal rear connection for 6300 A.
[5] MTZ2-HA10 dedicated to 1250 V systems.

	MasterPact MTZ2 From 800 to 4000 A				MasterPact MTZ3 From 4000 to 6300 A	
	Type	NA	HA	HA10 [5]	Type	HA
	MTZ2 08	800	800	800		
	MTZ2 10	1000	1000	1000		
	MTZ2 12	1250	1250	1250		
	MTZ2 16	1600	1600	1600		
	MTZ2 20		2000	2000		
	MTZ2 25		2500	2500		
	MTZ2 32		3200	3200		
	MTZ2 40		4000	4000	**MTZ3 40**	4000
					MTZ3 50	5000
					MTZ3 63	6300
		88	145	-		187
		-	-	105		-
		42	66	50		85
		AC-23A	AC-23A	AC-23A		AC-23A
		-	66	-		85
		-	100 %	-		
		-	66	-		85
		-	36	-		85
			145	-		187
		L or R	L or R	L or R		L
		NA	HA	HA10		HA
		●	● [3]	○		○
		●	●	●		● [4]
		●	● [3]	○		○
		●	●	○		● [4]
	439 x 441 x 403				479 x 786 x 403	
	439 x 556 x 403				479 x 1016 x 403	
	352 x 422 x 300				352 x 767 x 300	
	352 x 537 x 300				352 x 997 x 300	
	90/120				225/300	
	50/65				120/160	

Characteristics and performance

Circuit breakers

A

Common characteristics		MTZ1	MTZ2 & MTZ3	MTZ2 H10
Number of poles		3/4	3/4	3/4
Rated insulation voltage	Ui (V)	1000	1000	1250
Impulse withstand voltage	Uimp (kV)	12	12	12
Rated operational voltage	Ue (V AC 50/60 Hz)	690 [7]	690	1150
Suitability for isolation	IEC/EN 60947-2	⊸⊠⊸	⊸⊠⊸	⊸⊠⊸
Degree of pollution	IEC/EN 60947-1	3	3	3

Characteristics

			MasterPact MTZ1 From 630 to 1600 A						
Circuit breaker as per IEC/EN 60947-2									
MasterPact			06	08	10		12	16	
Rated current at 40/50 °C [1]		In (A)	630	800			1250	1600	
Sensor ratings		(A)	400 to 630	400 to 800	400 to 1000		630 to 1250	800 to 1600	
MasterPact			06 to 10				12 to 16		
Type			H1	H2	H3 [7]	L1 [2]	H1	H2	H3 [7]
Ultimate breaking capacity V AC 50/60 Hz	Icu (kA rms)	220/415 V	42	50	66	150	42	50	66
		440 V	42	50	66	130	42	50	66
		500/525 V	42	42	-	100	42	42	-
		660/690 V	42	42	-	-	42	42	-
		1150 V	-	-	-	-	-	-	-
Rated service breaking capacity	Ics (kA rms)	% Icu	100	100	75 [4]	100	100	100	75 [4]
Selectivity category [3]			B	B	B	A	B	B	B
Rated short-time withstand current V AC 50/60 Hz	Icw (kA rms)	0.5 s	42	42	50	10	42	42	50
		1 s	42	42	50	-	42	42	50
		3 s	24	24	30	-	24	24	30
Rated making capacity V AC 50/60 Hz	Icm (kÂ)	220/415 V	88	105	145	330	88	105	145
		440 V	88	105	145	286	88	105	145
		500/525 V	88	88	-	220	88	88	-
		660/690 V	88	88	-	52	88	88	-
		1150 V	-	-	-	-	-	-	-
Integrated instantaneous protection (DIN kA instantaneous ±10 %) [3]			-	90	110	10 In	-	90	105
Break time between tripping order and arc extinction		(ms)	25	25	25	9	25	25	25
Closing time		(ms)	< 50				< 50		

Durability as per IEC/EN 60947-2/3

Mechanical durability [6]			**MTZ1 06 to 10**				**MTZ1 12 to 16**		
Mechanical durability, C/O cycles x 1000	with periodic preventive maintenance		12.5	12.5	10	12.5	12.5	12.5	10
Electrical durability [6] at rated current In			**MTZ1 06 to 10 630 to 1000 A**				**MTZ1 12 to 16 1250 to 1600 A**		
Type of MasterPact			H1	H2	H3 [7]	L1	H1	H2	H3 [7]
Electrical durability, C/O cycles x 1000 IEC/EN 60947-2		440 V	6	6	6	3	6	6	6
		690 V	3	3	-	2	3	3	-
		1150 V	-	-	-		-	-	-
Electrical durability [6] at rated operational current Ie in AC-23A [3]			**MTZ1 06 to 12 630 to 1250 A**				**MTZ1 16 1600 A**		
Type of MasterPact			H1	H2	H3 [7]		H1	H2	H3 [7]
Electrical durability, C/O cycles x 1000 IEC/EN 60947-3		440 V	6	6	6		6	6	6
		690 V	3	3	-		3	3	-
		1150 V	-	-	-		-	-	-
Electrical durability [6] at rated operational current Ie in AC-3 [3]			**MTZ1 06 to 10 500 A**		**630 A**		**800 A**		**1000 A**
Type of MasterPact			H1/H2/H3						
Motor power (kW)		380/415 V	⩽ 250		250 to 335		335 to 450		450 to 560
		440 V	⩽ 300		300 to 400		400 to 500		500 to 630
		690 V	-		-		-		-
Electrical durability, C/O cycles x 1000 IEC/EN 60947-3 and IEC/EN 60947-4-1		440 V	6						
		690 V	-						

[1] 50 °C: rear vertical connected. Refer to temperature derating tables for other connection types.
[2] See the current-limiting curves in the "additional characteristics" section.
[3] For details on selectivity category A, B, AC-3, AC-23A, DIN-DINF, see page A-10.
[4] Ics: 50 kA for 415-440 V.
[5] MTZ2 H10 dedicated to 1250 V systems.

Characteristics and performance

Circuit breakers

Sensor selection

Sensor rating In (A)	400	630	800	1000	1250	1600	2000	2500	3200	4000	5000	6300
Ir threshold setting(A)	160 to 400	250 to 630	320 to 800	400 to 1000	500 to 1250	630 to 1600	800 to 2000	1000 to 2500	1250 to 3200	1600 to 4000	2000 to 5000	2500 to 6300

	MasterPact MTZ2 From 800 to 4000 A															MasterPact MTZ3 From 4000 to 6300 A		
	08	10	12	16	20							25	32	40		40	50	63
	800	1000	1250	1600	2000							2500	3200	4000		4000	5000	6300
	400 to 800	400 to 1000	630 to 1250	800 to 1600	1000 to 2000							1250 to 2500	1600 to 3200	2000 to 4000		2000 to 4000	2500 to 5000	3200 to 6300
	08 to 16				20							25 to 40				40 to 63		
	N1	H1	H2	L1 [2]	H10 [5]	N1	H1	H2	H3	L1 [2]	H10 [5]	H1	H2	H3	H10 [5]	H1	H2	
	42	66	100	150	-	42	66	100	150	150	-	66	100	150	-	100	150	
	42	66	100	150	-	42	66	100	150	150	-	66	100	150	-	100	150	
	42	66	85	130	-	42	66	85	130	130	-	66	85	130	-	100	130	
	42	66	85	100	-	42	66	85	100	100	-	66	85	100	-	100	100	
	-	-	-	-	50	-	-	-	-	-	50	-	-	-	50	-	-	
	100	100	100	100	100	100	100	100	100	100	100	100	100	100	100	100	100	
	B	B	B	B	B	B	B	B	B	B	B	B	B	B	B	B	B	
	42	66	85	30	50	42	66	85	65	30	50	66	85	65	50	100	100	
	42	66	85	30	50	42	66	85	65	30	50	66	85	65	50	100	100	
	22	36	50	30	50	22	36	75	65	30	50	66	75	65	50	100	100	
	88	145	220	330	-	88	145	220	330	330	-	145	220	330	-	220	330	
	88	145	220	330	-	88	145	220	330	330	-	145	220	330	-	220	330	
	88	145	187	286	-	88	145	187	286	286	-	145	187	286	-	220	286	
	88	145	187	220	-	88	145	187	220	220	-	145	187	220	-	220	220	
	-	-	-	-	105	-	-	-	-	-	105	-	-	-	105	-	-	
	-	-	190	80	-	-	-	190	150	80	-	-	190	150	-	-	270	
	25	25	25	10	25	25	25	25	25	10	25	25	25	25	25	25	25	
	< 70					< 70						< 70				< 80		

	MTZ2 08 to 16				MTZ2 20				MTZ2 25 to 40			MTZ3 40 to 63	
	25				20				20			10	
	MTZ2 08 to 16 800 to 1600 A				**MTZ2 20 2000 A**				**MTZ2 25 to 40 2500 to 4000 A**			**MTZ3 40 to 63 4000 to 6300 A**	
	N1/H1/H2	L1	H10		N1/H1/H2	H3	L1	H10	H1/H2	H3	H10	H1	H2
	10	3	-		8	2	3	-	5	1.25	-	1.5	1.5
	10	3	-		6	2	3	-	2.5	1.25	-	1.5	1.5
	-		0.5		-	-	-	0.5	-	-	0.5	-	-
	MTZ2 08 to 16 800 to 1600 A				**MTZ2 20 2000 A**				**MTZ2 25 to 40 2500 to 4000 A**			**MTZ3 40 to 63 4000 to 6300 A**	
	H1/H2		H10		H1/H2/H3			H10	H1/H2/H3		H10	H1	H2
	10		-		8			-	5		-	1.5	1.5
	10		-		6			-	2.5		-	1.5	1.5
	-		0.5		-	-	-	0.5	-	-	0.5	-	-
	MTZ2 08 to 16 800 A	**1000 A**	**1250 A**	**1600 A**	**MTZ2 20 (2000 A)**								
	H1/H2				H1/H2/H3								
	335 to 450	450 to 560	560 to 670	670 to 900	900 to 1150				-				
	400 to 500	500 to 630	500 to 800	800 to 1000	1000 to 1300				-				
	≤ 800	800 to 1000	1000 to 1250	1250 to 1600	1600 to 2000				-				
	6				6				-				
	6				6				-				

[6] The term "durability" is used to express the expectancy of the number of the operating cycles which can be performed by the device.
[7] For MTZ1 H3 the rated operational voltage Ue is limited to 440 V AC - 50/60 Hz.

Characteristics and performance

Switch-disconnectors

A

Common characteristics		MTZ1	MTZ2 & MTZ3	MTZ2 HA10
Number of poles		3/4	3/4	3/4
Rated insulation voltage	Ui (V)	1000	1000	1250
Impulse withstand voltage	Uimp (kV)	12	12	12
Rated operational voltage	Ue (V AC 50/60 Hz)	690	690	1150
Suitability for isolation	IEC/EN 60947-3			
Degree of pollution	IEC/EN 60947-1	3	3	3

Characteristics

			MasterPact MTZ1 From 630 to 1600 A				
Switch-disconnector as per IEC/EN 60947-3							
MasterPact			06	08	10	12	16
Rated current at 40/50 °C [1]		In (A)	630	800	1000	1250	1600
Type of MasterPact			HA			HA	
Rated making capacity	Icm (kÂ)	220...690 V	75			75	
AC-23A/AC-3 category V AC 50/60 Hz		1150 V	-			-	
Rated short-time withstand current	Icw (kA rms)	0.5 s	36				
AC-23A/AC-3 category V AC 50/60 Hz		1 s	36				
		3 s	20				
Unprotected circuit breaker - Tripping by shunt trip as per IEC/EN 60947-2							
Type of MasterPact							
Ultimate breaking capacity AC 50/60 Hz	Icu (kA rms)	220...690 V	-				
Rated service breaking capacity	Ics (kA rms)	% Icu					
Rated short-time withstand current	Icw (kA rms)	1 s	-				
		3 s	-				
Rated making capacity V AC 50/60 Hz	Icm (kÂ)	220...690 V	-				
Overload and short-circuit protection			-				
External protection relay: short-circuit protection, maximum delay: 400 ms [2]							

Durability as per IEC/EN 60947-2/3

Mechanical durability [4]			**MTZ1 06 to 10**		**MTZ1 12 to 16**	
Mechanical durability, C/O cycles x 1000	with periodic preventive maintenance		12.5		12.5	
Electrical durability [4] at Rated operational current Ie in AC-23A [3]			**MTZ1 06 to 12**		**MTZ1 16**	
			630 to 1000 A	**1250 A**	**1600 A**	
Type of MasterPact			HA			
Electrical durability, C/O cycles x 1000 IEC/EN 60947-3		440 V	6	6	6	
		690 V	3	3	3	
		1150 V	-	-	-	
Electrical durability [4] at Rated operational current Ie in AC-3 [3]			**MTZ1 06 to 10**			
			500 A	**630 A**	**800 A**	**1000 A**
Type of MasterPact			HA			
Motor power (kW)		380/415 V	≤ 250	250 to 335	335 to 450	450 to 560
		440 V	≤ 300	300 to 400	400 to 500	500 to 630
		690 V	-	-	-	-
Electrical durability, C/O cycles x 1000 IEC/EN 60947-3 Annex A and IEC/EN 60947-4-1		440 V	6			
		690 V	-			

[1] 50 °C: rear vertical connected. Refer to temperature derating tables for other connection types.
[2] External protection must comply with permissible thermal constraints of the circuit breaker (please consult us).
No fault-trip indication by the SDE or the reset button.
[3] For details on utilisation category AC-3 and AC-23A, see page A-10.
[4] The term "durability" is used to express the expectancy of the number of the operating cycles which can be performed by the device.
[5] MTZ2-HA10 dedicated to 1250 V systems.

Characteristics and performance

Switch-disconnectors

	MasterPact MTZ2 From 800 to 4000 A								MasterPact MTZ3 From 4000 to 6300 A		
	08	10	12	16	20	25	32	40	40	50	63
	800	1000	1250	1600	2000	2500	3200	4000	4000	5000	6300
	NA	HA	HA10 [5]			HA	HA10 [5]		HA		
	88	145	-			145	-		187		
	-	-	105			-	105		-		
	-										
	42	66	50			66	50		85		
	-	36	50			55	50		85		
		HA	HA10			HA	HA10		HA		
		66	-			66	-		85		
		100 %	-			100 %	-		100 %		
		66	-			66	-		85		
		36	-			55	-		85		
		145	-			145	-		187		
		-	-			-	-		-		

	MTZ2 08 to 16				**MTZ2 20**		**MTZ2 25 to 40**		**MTZ3 40 to 63**
	25				20		20		10
	MTZ2 08 to 16 800 to 1600 A				**MTZ2 20 2000 A**		**MTZ2 25 to 40 2500 to 4000 A**		**MTZ3 40 to 63 4000 to 6300 A**
	NA	HA	HA10		HA	HA10	HA	HA10	HA
	10	10	-		8	-	5	-	1.5
	10	10	-		6	-	2.5	-	1.5
	-	-	0.5		-	0.5	-	0.5	-
	MTZ2 08 to 16				**MTZ2 20**				
	800 A	**1000 A**	**1250 A**	**1600 A**	**2000 A**				
	NA/HA				HA				
	335 to 450	450 to 560	560 to 670	670 to 900	900 to 1150		-		
	400 to 500	500 to 630	500 to 800	800 to 1000	1000 to 1300		-		
	≤ 800	800 to 1000	1000 to 1250	1250 to 1600	1600 to 2000		-		
	6				6		-		
	6				6		-		

Utilisation category

Selectivity category A and B (IEC/EN 60947-2)

The Selectivity category is defined by the IEC/EN 60947-2 : 2013 standard:

■ **Selectivity category A:**
Circuit breakers not specifically intended for selectivity under short-circuit conditions with respect to other short-circuit protective devices in series on the load side, i.e. without an intentional short-circuit delay provided for selectivity under short-circuit conditions, and therefore without a short-circuit withstand current rating according to 4.3.5.4.

■ **Selectivity category B:**
Circuit breakers specifically intended for selectivity under short-circuit conditions with respect to other short-circuit protective devices in series on the load side, i.e. with an intentional short-circuit delay (which may be adjustable), provided for selectivity under short-circuit conditions. Such circuit breakers have a short-circuit withstand current rating according to 4.3.5.4.
The selectivity between MasterPact MTZ category B circuit breakers is certified up to the rated short-time withstand current (Icw).
When Icu > Icw, the circuit breakers integrate an instantaneous override protection (DIN) which operates above Icw.
On top of the selectivity category, the selectivity performance between 2 circuit breakers depends on the MicroLogic X control units type and on their settings. Please refer to the selectivity tables in the Complementary Technical Guide or to the Schneider Electric calculation tools.

DIN-DINF

MasterPact MTZ circuit breakers integrate two types of instantaneous short-circuit protection :

1: A “DIN” (Instantaneous override protection) active when the circuit breaker is closed. The DIN is activated above Icw. It operates on the instantaneous value of the current.

2: A “DINF”(Instantaneous making over-current voltage release) intended to instantaneously trip the circuit breaker in case of closing on a short-circuit current higher than its threshold. The DINF operates on the instantaneous value of the current. The DINF is disabled around 50 ms after the circuit breaker closing.

Unprotected circuit breaker

Circuit breaker without integrated protection control unit. The protection is ensured by an external protection relay which trips the circuit breaker MX or MN voltage release. The rated short-time withstand current (Icw) of the circuit breaker shall be higher than the maximum expected short-circuit current on the protected circuit.

Utilisation category AC-23A

Defined in standard for Switches (IEC/EN 60947-3); applies to devices specifically intended for the switching of motor loads or other highly inductive loads.
Utilization categories with suffix A (e.g. "AC-23A") designate devices which are intended for frequent operation. The corresponding number of operating cycles with the associated operational currents are specified in Table 4 of IEC/EN 60947-3.

Utilisation category AC-3

Defined in standard for Contactors and motor starters (IEC/EN 60947-4-1) and for switches-disconnectors (IEC/EN 60947-3 Annex A); applies to devices specifically intended for the switching of asynchronous squirrel-cage motors.

Select your MicroLogic X control unit

Overview of functions B-2

Protections
Functions of protections B-8
Tripping curves B-12
Limitation curves B-13

Measurement B-14

Maintenance & diagnostics B-22

Event Management B-26

Power supply B-28

B

Other chapters

Select your circuit breakers and switch-disconnectors A-1
Customize your MicroLogic X with digital modules C-1
Customize your circuit breaker with accessories D-1
Integrate in Smart panels - Architecture and systems E-1
Integrate in switchboard F-1
Integrate in special applications - Source-changeover systems G-1
Services H-1
Order your circuit breaker I-1

Overview of functions

B

Measurement

Energy management is the challenge of present & future generations.
To meet this requirement MicroLogic X incorporates all the measuring functions of a power meter including **Energy Class 1 accuracy** third-party certified.

Maintenance & Diagnostics

Optimal continuity of services as well as extended life of equipment is one of customers main concerns. For that purpose **MicroLogic X integrates new extended diagnosis** and assistance to maintenance.

Protection

Improvement of the reliability of MicroLogic X, dual settings and additional facilities **increase the performance and the flexibility** of low voltage systems of protection.

11 Optional 24/7 downloadable digital modules dedicated to upgrading MicroLogic X

- Undervoltage and overvoltage
- Underfrequency and overfrequency
- Reverse active power
- Ground-fault alarm
- Energy Reduction Maintenance Settings
- Energy per phase
- Individual harmonics analysis
- Power restoration assistant
- MasterPact operation assistant
- Waveform capture on trip event
- Modbus legacy dataset

Communication

- It is now common practice to make available most of the information processed by a Protection Control Unit, locally for network operation and maintenance, as well as remotely for higher functions of control, monitoring, energy efficiency and assets management.
- To comply with this requirement, MicroLogic X control units **incorporate several channels of communication, including Ethernet, Modbus SL and wireless communication facilities.**

B

> Protection for ...

... MicroLogic 2.0 X

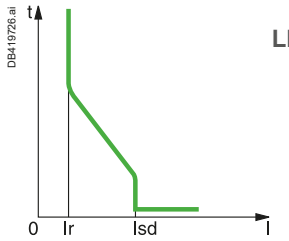

LI: Long-time
+ Instantaneous

... MicroLogic 5.0 X

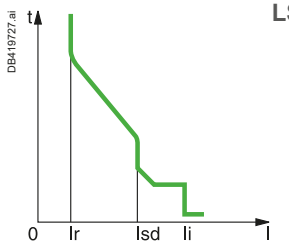

LSI: Long-time
+ Short-time
+ Instantaneous

... MicroLogic 6.0 X

LSIG: Long-time
+ Short-time
+ Instantaneous
+ Earth fault

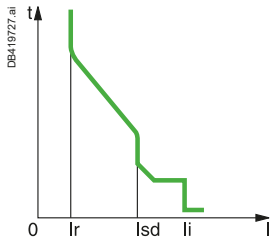

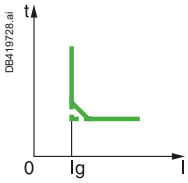

... MicroLogic 7.0 X

LSIV: Long-time
+ Short-time
+ Instantaneous
+ Earth leakage

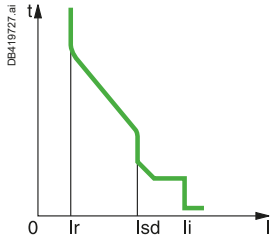

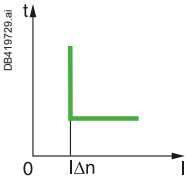

> Additional features of protections (page B-8)

Along with the LSIGV protections, new additional features and facilities allow to improve the protection performance of a system when difficulties are met such as low values of the short-circuit current or the need to limit the thermal constraints to the equipment: dual settings, fine settings, zone selective interlock, tripping mode (Standard/Fast).

> Measurement (page B-14)

MicroLogic X measures all electrical parameters of an electrical network: currents, voltages, frequency, power, energy, power factor, current and power demand.
Min/Max and average values are calculated for most of the parameters.
Optional digital modules allow the measurement of energy per phase, and to perform Waveform capture.

> Maintenance & Diagnostics (page B-22)

Diagnostic features are intended to limit the risk of power interruptions and to re-energize the installation as quickly as possible after a trip.
They provide alarms and messages to help the user in scheduling both preventive and predictive maintenance, and device replacement.

> Communication (page E-1)

New generation MicroLogic X control units incorporate wireless technology (Bluetooth and NFC) that allows the transfer of a wide selection of critical information (protection, measurements, Maintenance & diagnostics) to your mobile device, by means of Ecostruxure Power Device App app. Alternatively, MasterPact MTZ can be equipped with ETHERNET communication through either the IFE module or the new embedded EIFE that includes webpages.
Modbus SL communication is available through the IFM interface module.

> Optional digital modules (chapter C)

Optional digital modules can be purchased and downloaded to extend the performance of MicroLogic X control units. They are dedicated to Protection, Measurement, and Maintenance & diagnostics, and are available through Go Digital on the Schneider Electric website, open 24/7.

B

MasterPact MTZ

> Makes power available and reliable in a range of application and operating conditions.
> Incorporates the lastest technology to enhance both performance and safety.

Overview of functions

	As standard on MasterPact MTZ with MicroLogic X	As options with digital modules mainly through Ecostruxure Power Device App (and more coming soon)
Protection	• LSIGV protection [1] + Dual settings, ZSI, Trip history, Settings traceability and more [1] Depending on MicroLogic X model. > See page B-8	• Undervoltage and overvoltage • Underfrequency and overfrequency • Reverse active power • Ground fault alarm • Energy Reduction Maintenance Settings (ERMS) > See page C-5 and C-9
Measurement	• New full Power meter embedded IEC/EN 61557-12 certified Class 1 (Power & Energy) > See page B-14	• Energy per Phase • Individual harmonics analysis > See page C-10 and C-11
Maintenance & diagnostics	• New MasterPact MTZ embedded diagnostics > See page B-22	• Power restoration assistant • MasterPact operation assistant • Waveform capture on trip event • Modbus legacy dataset > See page C-12 to C-15

Overview of functions

All MasterPact circuit breakers are equipped with a MicroLogic X control unit which can be upgraded 24/7 with downloadable digital modules.

B

The functions of protection...

...included in the control unit are designed to comply with electrical installation rules providing overcurrent and short-circuit protection.
MicroLogic 6.0 X provides earth-fault protection.
MicroLogic 7.0 X provides earth-leakage protection. An embedded Power meter complying with IEC/EN 61557-12 offers the measurement parameters required to optimise energy management.
The optional 24/7 downloadable digital modules allow you to upgrade the functions of Protection, Measurement and Maintenance & diagnostics.

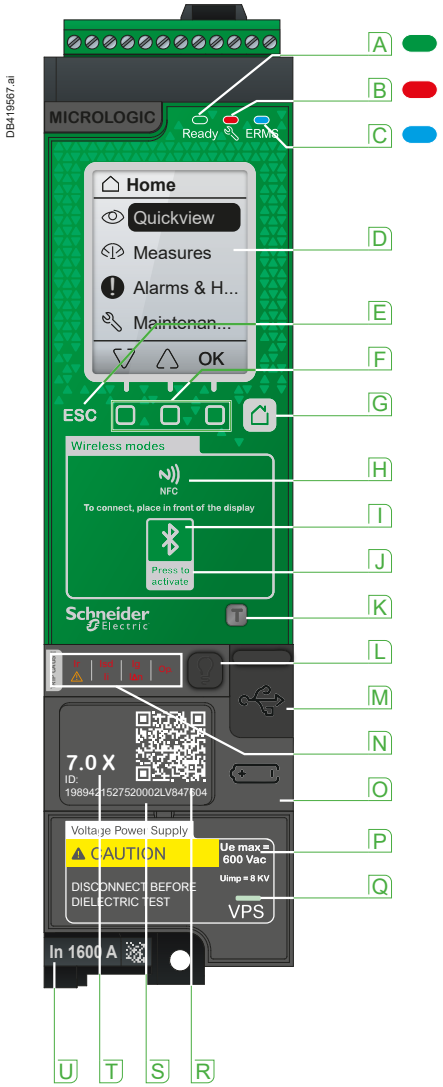

All the information processed and stored by MicroLogic X control unit is accessible by means of ergonomic Human Machine Interfaces:

- Embedded HMI with coloured backlight,
- Smartphones via Bluetooth and NFC communication,
- External PC through a USB connection.

Connection to Ethernet is achieved with dedicated interface modules: EIFE and IFE.

Connection to Modbus SL is achieved with the IFM interface module.

- A Ready LED (Green)
- B Service LED (Orange/red)
- C ERMS LED (Blue)
- D Graphic display screen
- E Escape button ESC
- F Three contextual buttons
- G Home button
- H NFC wireless communication zone
- I Bluetooth LED
- J Bluetooth activation button
- K Test button for earth fault and earth leakage protection (MicroLogic 6.0 X and 7.0 X)
- L Test/Reset button for trip cause LEDs and alarms
- M Mini-USB port under rubber cover
- N Overload and trip cause LEDs
- O Cover for battery
- P VPS voltage power supply module (optional)
- Q VPS LED to indicate that the VPS is energyzing the control unit
- R QR code to product information
- S Control unit identification number
- T Control unit type
- U Sensor rating In (A) (Please refer to page A-7)

Note: Certain functions of the MicroLogic X control unit require additional accessories and interface modules as described in the chapter D.

Overview of functions

MicroLogic X ensures a high degree of reliability and immunity to conducted and radiated disturbances with its enhanced internal architecture including a dedicated ASIC electronic component for the protection functions.
A high level of diagnostics allows to follow the health of the circuit breaker in real time.
With its embedded backlight HMI, MicroLogic X allows the quick identification of alarm messages.
The information processed by the MicroLogic X may be displayed on the embedded backlight HMI, a smartphone through Bluetooth or NFC and a PC through the USB connection.
The connection to Ethernet is achieved with the EIFE and IFE interface modules.
The connection to Modbus SL is achieved with the IFM interface module.
A wide range of accessories allows to improve the functions of control and monitoring.

DB430618.ai

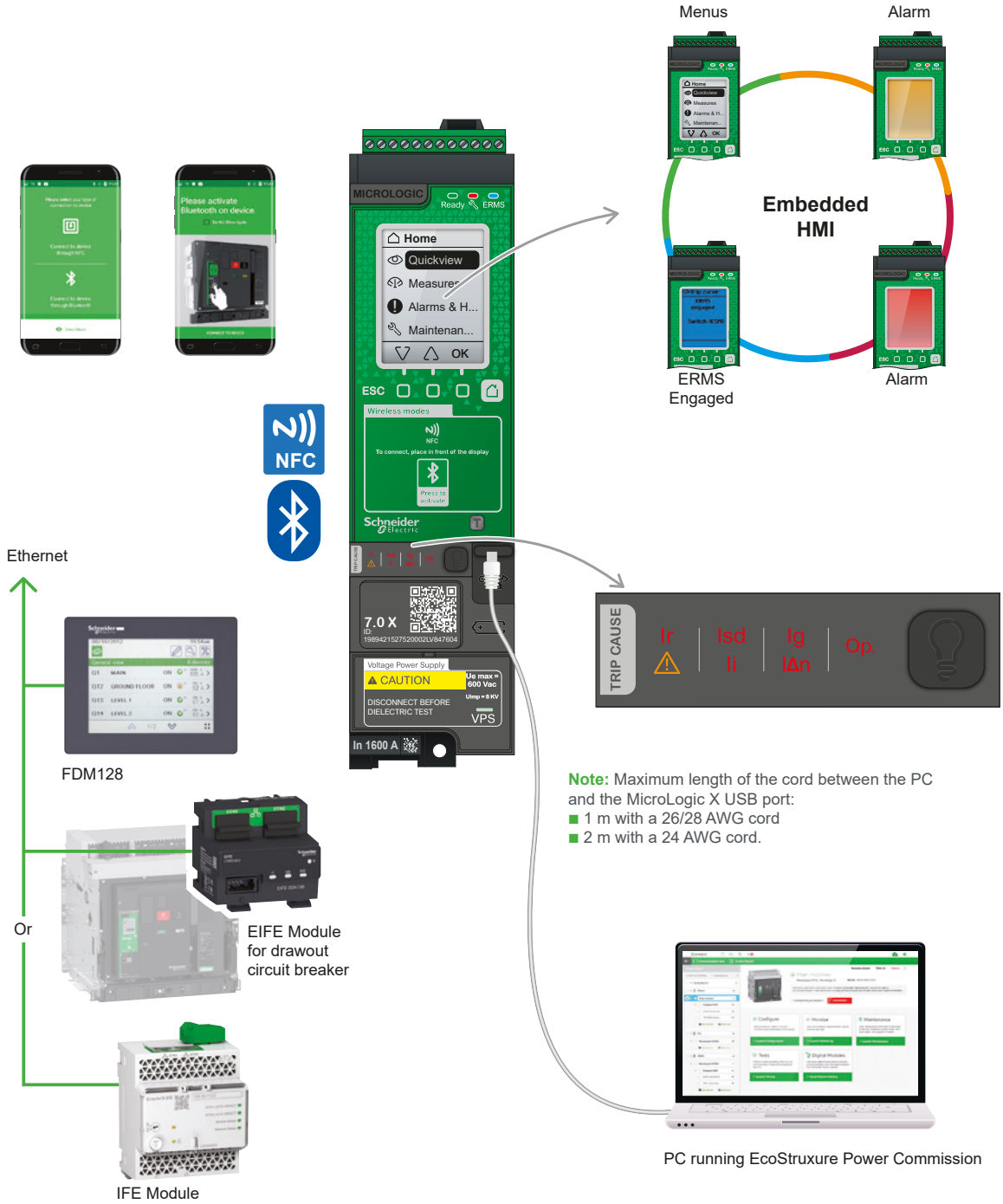

Note: Maximum length of the cord between the PC and the MicroLogic X USB port:
- 1 m with a 26/28 AWG cord
- 2 m with a 24 AWG cord.

Protections

Functions of protections

The MicroLogic X control unit is suitable for different systems of voltage, three or four wires up to 690 V AC, 50/60 Hz and for all earthing systems as defined per IEC or North American standards (TNC, TNS, TT, IT, HRG).

B

MicroLogic 2.0 X

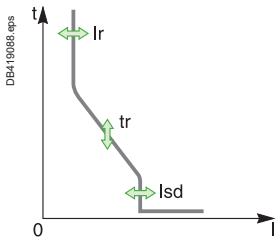

Long-time	**ANSI 49RMS/51**										
Current setting (A)	**Ir** = In x …		**Ir** = 0.4 In to In, step 1 A								
			Tripping between 1.05 and 1.20 Ir								
Time setting			**tr** = 0.5 s to 24 s, step 0.5 s for 6 Ir								
Time setting exemple: time delay (s)	Accuracy: 0 to -30 %	1.5 x Ir	12.5	25	50	100	200	300	400	500	600
	Accuracy: 0 to -20 %	6 x Ir	0.5 [1]	1	2	4	8	12	16	20	24
	Accuracy: 0 to -20 %	7.2 x Ir	0.7 [2]	0.69	1.38	2.7	5.5	8.3	11	13.8	16.6
Thermal memory			After tripping								
Instantaneous	**ANSI 50**										
Pick-up (A) Accuracy: ±10 %	**Isd** = Ir x …		**Isd** = 1.5 to 10 Ir, step 0.5 Ir [4]								
Operating time (ms)			Non tripping time: 20 Max breaking time: 80								

MicroLogic 5.0 X - 6.0 X - 7.0 X

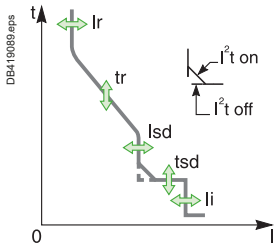

Long-time	**ANSI 49RMS/51**										
Current setting (A)	**Ir** = In x …		**Ir** = 0.4 In to In, step 1 A								
			Tripping between 1.05 and 1.20 x Ir								
Time setting			**tr** = 0.5 s to 24 s, step 0.5 s for 6 Ir								
Time setting exemple: time delay (s)	Accuracy: 0 to -30 %	1.5 x Ir	12.5	25	50	100	200	300	400	500	600
	Accuracy: 0 to -20 %	6 x Ir	0.5 [1]	1	2	4	8	12	16	20	24
	Accuracy: 0 to -20 %	7.2 x Ir	0.7 [2]	0.69	1.38	2.7	5.5	8.3	11	13.8	16.6
Thermal memory			After tripping								
Short-time	**ANSI 50TD/51**										
Pick-up (A) Accuracy: ±10 %	**Isd** = Ir x …		**Isd** = 1.5 Ir to 10 Ir, step 0.5 Ir [4]								
Time setting tsd (s)	Settings	I²t Off	0	0.1	0.2	0.3	0.4				
		I²t On	-	0.1	0.2	0.3	0.4				
Operating time at 10 x Ir I²t Off or I²t On	non tripping time (ms)		20	80	140	230	350				
	max breaking time (ms)		80	140	200	320	500				
Instantaneous	**ANSI 50**										
Pick-up (A) Accuracy: ±10 %	**Ii** = In x …		Ii = 2 In to 15 In, step 0.5 In [4] and OFF protection								
Ii tripping mode			**Standard**				**Fast**				
Operating time	non tripping time (ms)		20				0				
	max breaking time (ms)		50				30				

MicroLogic 6.0 X

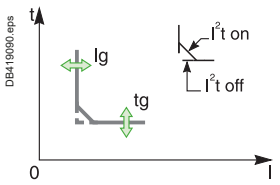

Earth fault	**ANSI 50N-TD/51N**						
Pick-up (A)	**Ig** = In x …		**Ig** = 0.2 [3] In to In, step 0.1 In [4] and OFF protection				
Accuracy: ±10 %							
Time setting t_g (s)	Settings	I²t Off	0	0.1	0.2	0.3	0.4
		I²t On	-	0.1	0.2	0.3	0.4
Operating time	non tripping time (ms)		20	80	140	230	350
	max breaking time (ms)		80	140	200	320	500

MicroLogic 7.0 X

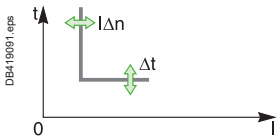

Residual earth leakage (Vigi)	**ANSI 50G-TD**						
Sensitivity (A)	**IΔn**	0.5 A to 30 A, step 0.1 A					
Accuracy complies with IEC/EN 60947-2 Annex B							
Time delay Δt (ms)	Settings	60	150	230	350	800	
	non tripping time (ms)	60	150	230	350	800	
	max breaking time (ms)	140	230	320	500	1000	

[1] 0 to -40 %
[2] 0 to -60 %
[3] 0.3 In to In for In ≤ 400 A

[4] Finer resolution settings are possible with EcoStruxure Power Commission software and Ecostruxure Power Device App app.

Protections

Functions of protections

The characteristics of the protection offers a full selectivity for the majority of the applications with all the types of ComPact circuit breakers and between MasterPact as well, even for a high level of short-circuit currents. Fine setting, dual settings and zone selective interlocking allow to improve the performance of the low voltage protection systems.

Functions of protection

The following functions of protection are available, depending of the type of MicroLogic X selected: Long-time overload protection, Short-time short-circuit protection, Instantaneous short-circuit protection, Earth fault protection, Earth leakage protection.
All these protections operate without auxiliary supply.
They are powered by the currents flowing throught the circuit breaker.
In MicroLogic 7.0 X the earth leakage protection is powered by the system voltage via the voltage power supply module (VPS).

Long-time overload protection (ANSI 49RMS/51)

The long-time protection protects cables, busbars, and busbar trunkings against overload. It is based on the true RMS current. It is implemented independently for each phase and the neutral. This protection is an overcurrent time dependent protection with thermal memory. It operates as a thermal image using the heating and cooling model of a conductor.
After tripping the protection continues to reproduce the cooling of the conductors.
The long-time protection can also be used for transformer or generator protection thanks to the wide range of the proposed settings.

Short-time short-circuit protection (ANSI 50TD/51)

The short-time protection protects the installation against short-circuits for phase to phase, phase to neutral and phase to earth short-circuits with total selectivity. It is based on the true RMS current. It includes two characteristics depending on the status of the I^2t setting:

- when I^2t is OFF, a definite time characteristic is selected. The protection trips with the time delay tsd as soon as the setting current Isd is exceeded.
- when I^2t is ON, an inverse time characteristic is selected. The protection operates with an inverse time characteristic up to 10 x Ir and above with a definite time characteristic.

Instantaneous short-circuit protection (ANSI 50)

The instantaneous protection protects the installation against phase to phase, phase to neutral and phase to earth short-circuits.
The protection operates with a definite time characteristic.
It trips without additional time delay as soon as the setting current Ii is exceeded. The protection offers two selectable Ii trippng mode (Standard/Fast):

- standard max breaking time: 50 ms for applications requiring selectivity. Full selectivity can be ensured with any ComPact NSX circuit breaker installed downstream of a MasterPact.
- fast max breaking time: 30 ms typically used for applications where the thermal constraints to the equipment need to be limited and when selectivity is not required.

Earth fault protection (ANSI 50N-TD/51N)

The earth fault protection can be achieved in two ways:

- by performing the summation of the three phases and neutral currents
- by means of an external sensor (SGR [1]) installed around the cable performing the connection of the transformer neutral point to the earth. The connection of the SGR sensor to MicroLogic 6.0 X is made through a MDGF interface module.

The protection includes two characteristics depending on the status of the I^2t setting:

- when I^2t is OFF, a definite time characteristic is selected. The protection trips with the time delay tg as soon as the setting current Ig is exceeded.
- when I^2t is ON, an inverse time characteristic is selected. The protection operates with an inverse time characteristic up to In and above with a definite time characteristic.

[1] for SGR option please consult us.

Earth leakage protection (ANSI 50G-TD)

Earth leakage or "Vigi" protection is based on true leakage current measured by a rectangular sensor encompassing the 3 phases or the 3 phases and the neutral. The protection operates with a definite time characteristic. It trips with the time delay Δt as soon as the leakage current exceeds IΔn.
The earth leakage protection complies with IEC/EN 60947-2 Annex B.

Neutral overload protection

For a four-pole circuit breakers, the neutral protection may be set using a three-position switch:

- neutral unprotected (4P 3d),
- neutral protection at 0.5 Ir (4P 3d + N/2),
- neutral protection at Ir (4P 4d). Neutral protection greater than Ir, but lower than In, limited at 1.6 Ir phase.

For a three-pole circuit breaker the protection of the neutral requires an additional external neutral CT (ENCT). A long-time overcurrent characteristic is dedicated to the neutral protection.

Tripping voltage releases supervision (ANSI 74)

The MicroLogic X control unit continously checks the electrical continuity of the circuit breaker tripping voltage release (MITOP). It generates an alarms in case of failure.

Lock-out function (ANSI 86)

Any operation of the above protection trips and locks the circuit breaker in the open position until it is reset either manually or electrically (see page D-21).

Fault trip indication and inter-trip (ANSI 94)

Any operation of the above protection activates SDE auxiliary contacts for signalling or inter-trip to other device. SDE contact(s) stay close until the circuit breaker is reset either manually or electrically (see page D-9 and D-21).

Trip history

All trip events with the relevant information for their analysis are recorded in the trip history.
For each trip inside the trip history (except the last one) it includes:

- the type of protection that causes the trips: Long time overload, Short time short-circuit, Instantaneous short-circuit, Earth fault, Earth leakage,
- the date and time of the fault,

The last 50 trip events can be retrieved by means of a PC running EcoStruxure Power Commission or through Bluetooth. These last 50 trips are also accessible from the embedded display.
In addition, MicroLogic X logs also:

- the last electrical values measured before the fault (voltages, currents, frequency, unbalance current and voltage),
- the tripping currents during the fault just before MasterPact MTZ tripping (phase, neutral and ground currents).
- The setting of the protection.

The last trip may be retrieved through the NFC powerless wireless communication while the circuit breaker is open and the MicroLogic X is not energized.

Protections

Functions of protections

B

DB421316.ai

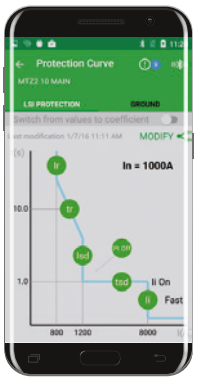

DB419569.ai

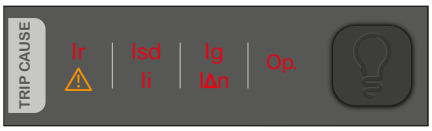

Dual settings

This function includes two sets of settings for every function of protection (LSIG) according to the type of MicroLogic X except for the earth leakage. User may switch from one set of settings to the other to comply with special conditions of operation. A typical application is to adjust the short-circuit protection when an installation can be supplied by two sources (grid / generator set) with very different levels of short-circuit current. The settings can be selected by one of the following means:

- by a digital input through the I/O module,
- via Ethernet,
- from the HMI.

Overcurrent and trip cause indications

Five LEDs are available on the front of the MicroLogic X Control unit.

- The first LED it is a bicolor LED with 2 functionalities, Prewarn/Warn LED ⚠:
  - alarm PreWarn LED that becomes orange when I > 0.9 Ir
  - alarm Warn LED that becomes red when I > 1.05 Ir
- The second LED **Ir** is dedicated to the long time overload protection. It becomes red when the protection trips.
- The third LED **Isd/Ii** is dedicated to the short-time and instantaneous short-circuit protection. It becomes red when the protection trips.
- The fourth LED **Ig/IΔn** is dedicated to the ground/earth fault and the earth leakage protection. It becomes red when the protection trips.
- The fifth LED **Op.** is dedicated to the optional protections provided by the optional digital modules. It becomes red when any of the optional protections trip.

The fault indication LEDs remain ON for 4 hours after trip if not reset by test/reset push button. After 4 hours without reset it is possible to reactivate the trip indication LEDs by pushing the test/reset push button. Under normal operating conditions, the battery supplying the LEDs has a service life of approximately 10 years.
It is continuously monitored.

Protection settings and checking

The protections can be set by means of the embedded display, a smartphone via Bluetooth or with a PC running EcoStruxure Power Commission, and additionally via Ethernet and Modbus SL communication.
EcoStruxure Power Commission allows:

- To set and check the protections,
- To download current settings and upload new settings,
- To check the breaker operation,
- To retrieve and display all the information processed by the MicroLogic X: Measurements, alarms, diagnostics,
- To generate and store reports.

Additionally, for MicroLogic 6.0 X and MicroLogic 7.0 X, the operation of earth-fault and earth-leakage protection can be checked by pressing the test button located above the USB connector.

Setting change traceability

Any setting change is recorded in a dedicated protection history including:

- the date and the time of the last setting change,
- the previous settings and the new settings,

The settings corresponding to the active trip curve and the date of the last setting change can be retrieved through NFC powerless wireless communication while the circuit breaker is open and the MicroLogic X is not energized.

Setting change locking

The general configuration menu of MicroLogic X embedded display allows:

- to enable or disable the protection setting change from the embedded display
- to enable or disable the protection setting change from external access:
  - a smartphone via Bluetooth
  - a PC running EcoStruxure Power Commission,
  - Ethernet and Modbus SL communication.

In addition the setting change from external access is password protected.

DB421319.ai

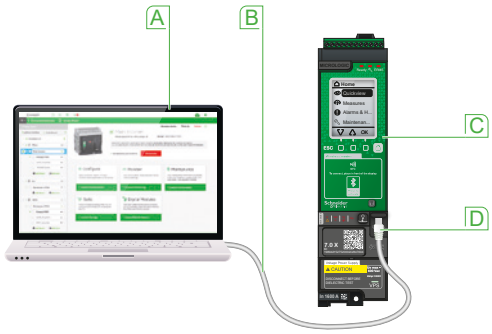

A PC running EcoStruxure Power Commission
B USB cable
C MicroLogic X Control unit
D USB connector in front

B

Zone Selective Interlocking (ZSI)

ZSI is a system designed to reduce the stress on electrical distribution equipment during short-circuit or earth fault conditions. It works with a previously coordinated protection by reducing the fault tripping time while maintaining the selectivity. Each version of the control unit MicroLogic X includes the ZSI function.
The ZSI function is associated with short-time short-circuit protection and earth fault protection. A single ZSI input is provided for earth fault and short-time short-circuit protections.

The control unit detecting a fault sends a signal upstream and checks for a signal arriving from downstream. If there is a signal from downstream, the circuit breaker remains closed for the full duration of its tripping delay. If there is no signal from downstream, the circuit breaker trips with no intentional delay, regardless of the tripping-delay setting.
Zone selective interlocking can be implemented between any types of MasterPact MTZ. When ZSI connects circuit breakers other than MasterPact MTZ, it may be necessary to use a Restraint Interface Module (RIM).

Fault 1
Only circuit breaker A detects the fault. Because it receives no restraint signal from downstream, it trips with no intentional delay, regardless of its tripping delay set to 0.3.

Fault 2
Circuit breakers A and B detect the fault. Circuit breaker A receives a restraint signal from B and remains closed for the full duration of its tripping delay set to 0.3.
Circuit breaker B does not receive a restraint signal from downstream and opens immediately, despite of its tripping delay set to 0.2.

Limits to device interconnection:
- A maximum of 15 upstreams devices may be connected to the ZSI input (Z1-Z2).
- A maximum of 15 downstream devices may be connected to the ZSI input (Z3-Z4). If additional units are needed, a Restraint Interface Module (RIM) is required.

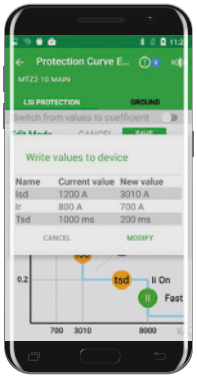

DB421320.ai

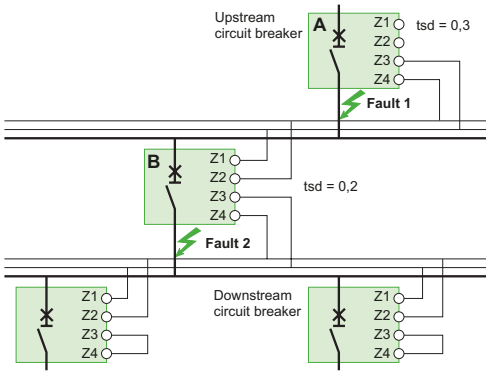

DB419093R.eps

Restraint Interface Module - RIM (ANSI 78)

The Restraint Interface Module (RIM) serves three purposes in a ZSI system with MasterPact MTZ equipped with MicroLogic X:
- it boosts the voltage level of the restraint signal
- it converts the restraint signal to be compatible with other types of Schneider Electric circuit breaker (MasterPact NT/NW, ComPact) and Square D circuit breaker as well
- when combining different generations of devices between upstream/downstream (MasterPact MTZ, MasterPact NT/NW, ComPact) it provides Double insulation to meet requirements of IEC standards.

Within a ZSI system , the voltage level of the restraint signal must be maintained at a certain level in order to activate the time delay of electronic trip devices.
If the restraint signal is too weak to activate the time delay feature, all devices that sense the fault will trip with no intentional delay.
The voltage level of the restraint signal can be ineffective due to:
- restraint wire length exceeding 300 m
- one device sending a restraint signal to too many devices
- differing signal levels between different electronic trip systems.

If the restraint wire length exceeds 300 m, the voltage drop along the control wire will weaken the restraint signal until it can no longer activate the time delay on the upstream device. If wire length exceeds 300 m, a RIM module must be placed in the circuit to boost the voltage level of the restraint signal.
In addition, if the number of upstream circuit breakers exceeds 15, then a RIM is required.
For further details on allowable RIM combinations, please refer to instruction sheet of ZSI interface module.
RIM module is operational for electrical systems with rated operational voltage [Ue] up to =690 V AC 50/60 Hz only.

Characteristics
- Power supply DC: 24 V DC +25 % -20 % ,6 mA.
- Maximum operating temperature surrounding the module when installed inside a switchboard: -35 °C to 75 °C.
- Standards compliance: IEC 60950-1 , CISPR 22, CISPR 24, UL 489, UL 489SE.
- CE Marked according to LVD (Low Voltage Directive) / IEC 60950-1.

Connection & Installation
- Terminal Strips, jumpers and 35 mm DIN mounting rail (IEC/EN 60715).
- Twisted wire with a braided shield, 300 V AC, 14 AWG - 2.5 mm² / 22 AWG - 0.4 mm².

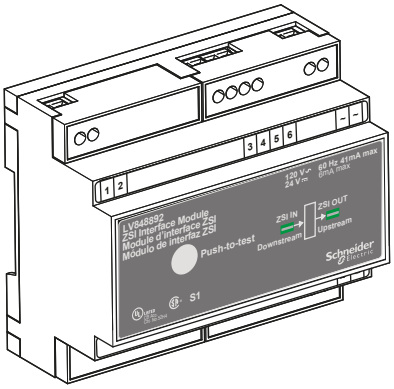

DB425288.ai

Protections

Tripping curves

B

MicroLogic 2.0 X

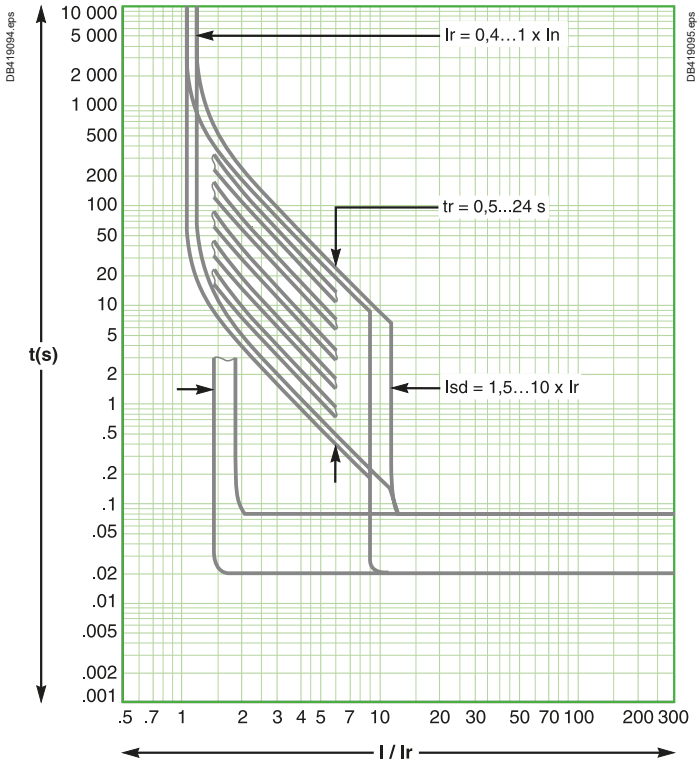

MicroLogic 5.0 X - 6.0 X - 7.0 X

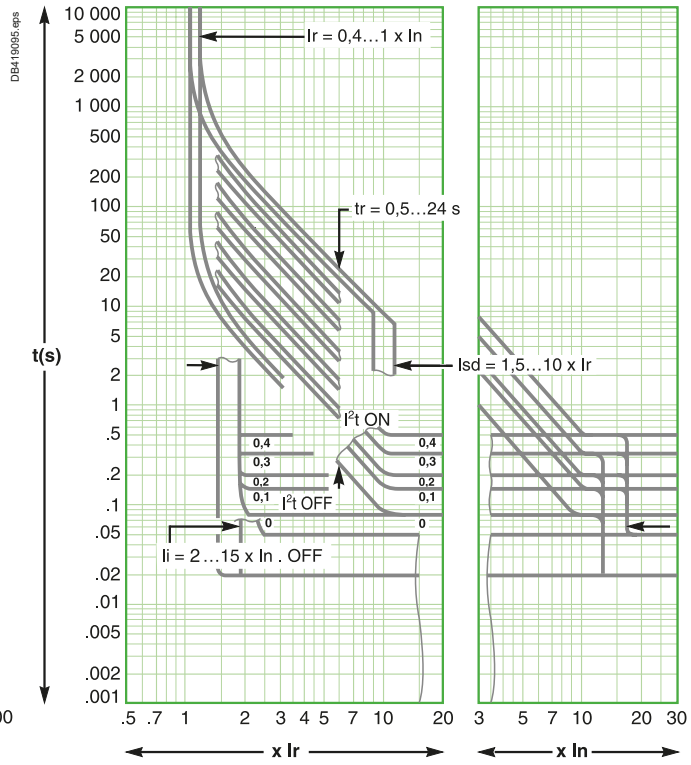

Earth fault protection (MicroLogic 6.0 X)

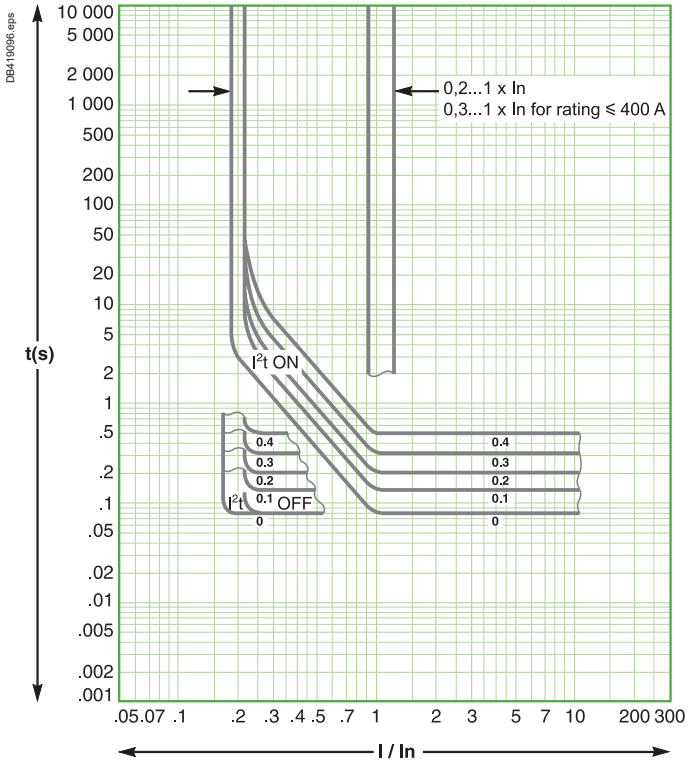

Life Is On Schneider Electric

B

Voltage 380/415/440 V AC

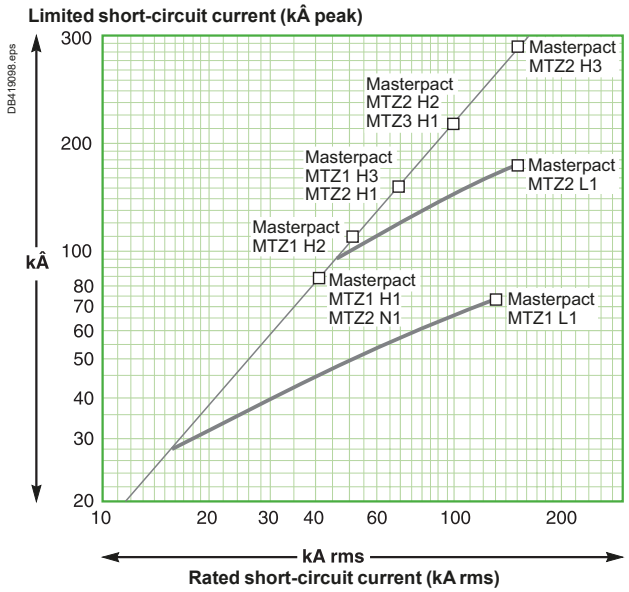

Voltage 660/690 V AC

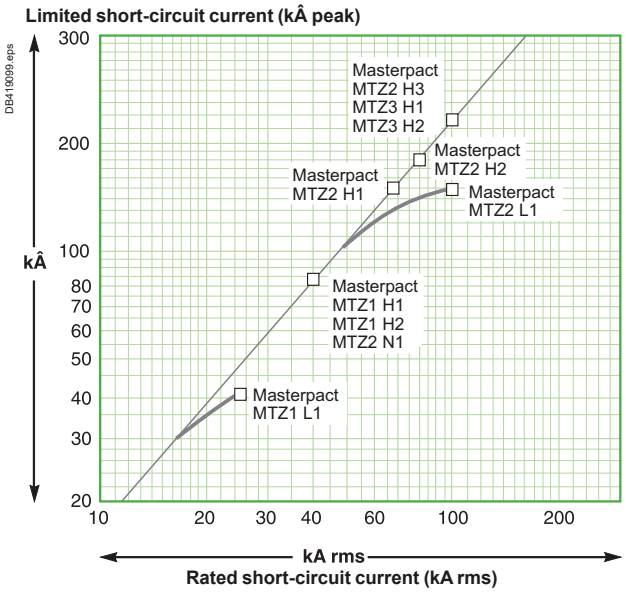

Voltage 380/415/440 V AC

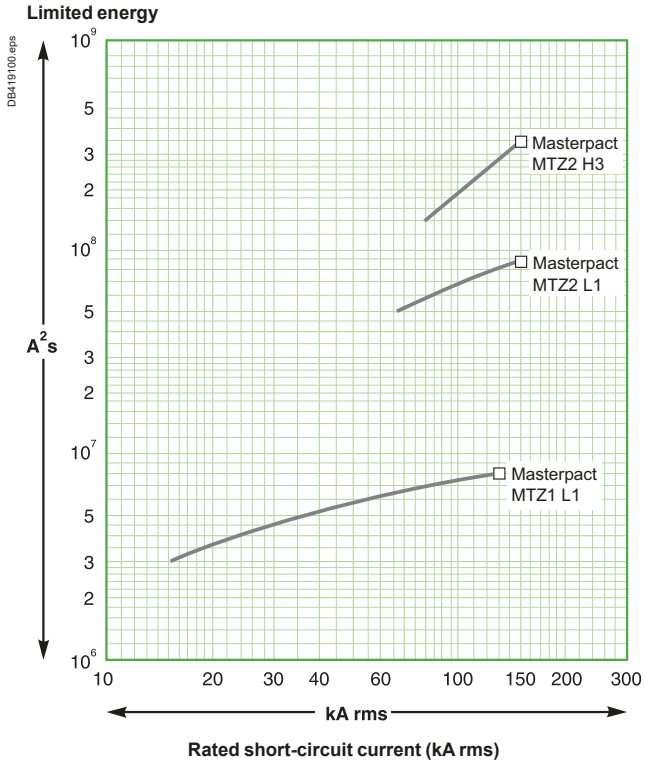

Voltage 660/690 V AC

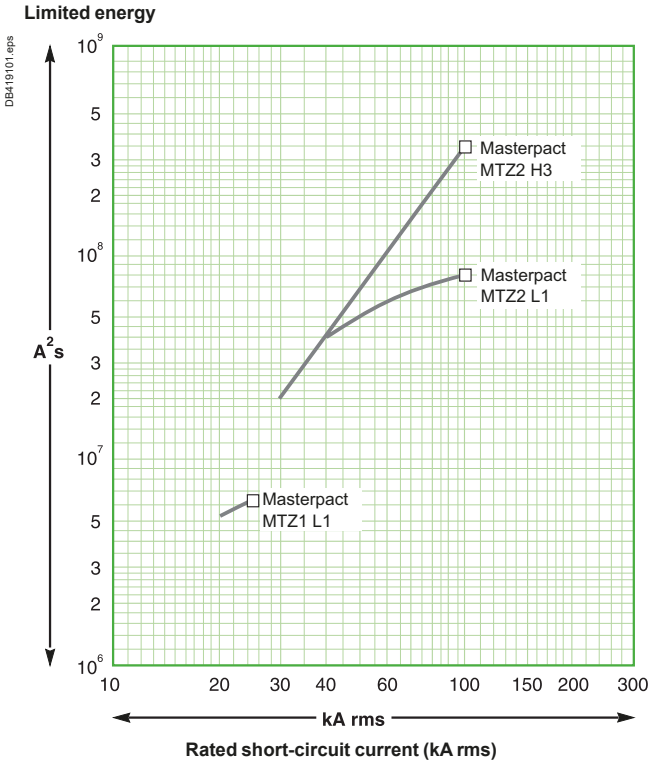

Measurement

B

MasterPact MTZ with its embedded current sensors and MicroLogic X is a PMD-DD Power Meter Device complying with IEC/EN 61557-12, Class 0.5 for voltage and current and Class 1 for active power and energy measurements.
For each measurement the accuracy is certified within a temperature range of -25 °C to 70 °C and takes into account all the individual errors of the components included in the measuring chain.

DB421321.ai

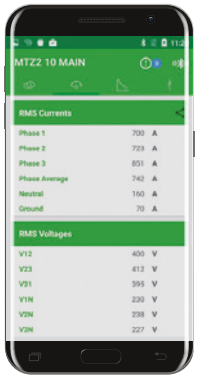

DB421322.ai

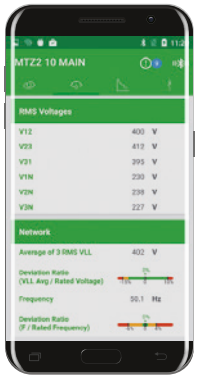

DB430727.ai

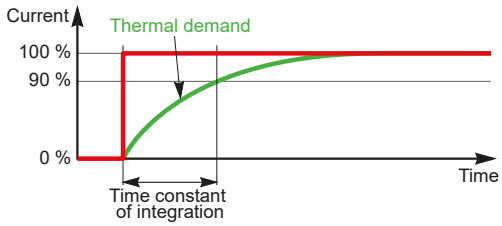

Thermal demand

DB430638.ai

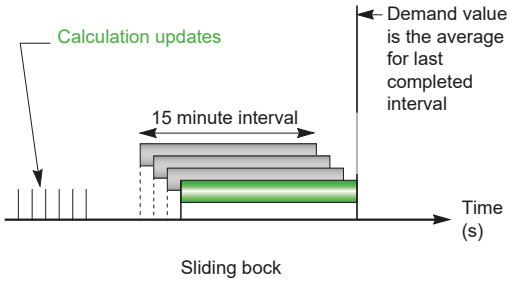

Demand calculated with a sliding block interval

Measures and electrical parameters calculated by the MicroLogic X control unit

Based on the measurement of line currents, neutral current, phase-to-phase voltages and phase-to-neutral voltages, MicroLogic X control unit calculates (according to IEC 61557-12, Equipment for testing, measuring or monitoring of protective measures - Part 12: Performance measuring and monitoring devices (PMD)) and displays all the parameters required to monitor any AC electrical power system, including power quality, power management and energy efficiency:

- RMS values of currents and voltages,
- Active, reactive and apparent powers,
- Active, reactive and apparent energies,
- Power factor,
- W.A.G.E.S (Water, Air, Gas, Electricity, Steam) through digital inputs of I/O module,
- Frequency,
- Phase sequence,
- Voltage unbalances, Current unbalances,
- Current demands,
- Total active, reactive and apparent power demands,
- THD of voltages, THD of currents.

The calculation of current and power demands are performed in compliance with IEC/EN 61557-12.
The current demand is calculated using the thermal method. The time constant of integration is adjustable between 1 and 60 minutes, in steps of 1 minute.
The power demand is calculated using arithmetical integration of power RMS values during a period of time divided by the length of the period. In MicroLogic X the power demand is calculated according to the sliding block method, with a sliding block of calculation adjustable between 1 and 60 minutes, in steps of 1 minute.

Note: as defined by IEC 61557-12:
- A demand is the average value of a quantity over a specified period of time.
- Thermal current demand calculates the demand based on a thermal response, which mimics the analog-type thermal demand meters.
- Power demands are calculated using arithmetical integration of power values during a period of time divided by the length of the period. The result is equivalent to the energy accumulated during the period of time divided by the length of the period. The period of calculation can be fixed or sliding.

Electrical values calculated by MicroLogic X control units can be displayed on the embedded HMI, a smartphone via Bluetooth, a PC running EcoStruxure Power Commission software and on the FDM128 display unit. They are refreshed every 2 seconds.The display on the embedded HMI is accessed by means of a contextual menu allowing easy navigation through the electrical values. Alternatively a Quickview option allows the main basic values to be displayed.
MicroLogic X control units log and time stamp minimum and maximum values since last reset of all relevant measurements (currents, voltages, frequency, active power, reactive power, apparent power, THDI, THDV...). For the complete list of measurements and min / max values, see MicroLogic X User guide. The maximum and minimum values are resettable from the embedded display, a smartphone via Bluetooth or a PC running EcoStruxure Power Commission software.
An optional external 24 V DC power supply or VPS module is required to process and display measurements, including energy counters, for currents below 20 % of the rated current .
The phase-to-neutral voltages are available for 4-pole and 3-pole circuit breaker as well providing the connection of the VN terminal of MicroLogic X to the neutral. To ensure the accuracy for the active power measurement the connection of the VN terminal of MicroLogic X to the neutral is mandatory. Please refer to the user manual for more details concerning the wiring and configuration of MicroLogic X.

MasterPact MTZ for energy management functions

Active Power and Energy metering in MasterPact MTZ with MicroLogic X has been designed and tested to provide excellent accuracy: **Class 1 according to IEC/EN 61557-12**. This standard specifies requirements for combined performance of measuring and monitoring devices that measure and monitor the electrical parameters within electrical distribution systems. It covers both devices with external sensors such as current and/or voltage transformers like stand alone power meter (PMD-S) and devices with embedded sensors (PMD-D) like circuit breakers.

In addition a list of available performance class for all relevant measurement functions is specified in IEC/EN 61557-12, in opposition to most other standards such as IEC 62053-2x series that are dealing only with active and reactive energy.

MasterPact MTZ equipped with MicroLogic X and its own embedded sensors is a Class 1 full chain measurement PMD-DD device for active power and energy metering according to IEC/EN 61557-12. It complies with the requirements of K70 temperature class according to Table 6 of IEC/EN 61557-12.

PMD-DD offer the benefit of avoiding uncertainty and variation due to external sensors and wiring.

IEC/EN 61557-12 standard defines three levels of uncertainty (intrinsic uncertainty, operating uncertainty, overall system uncertainty) that need to be checked to ensure accuracy class.
The uncertainty is the estimated amount or percentage by which a measured value may differ from the true value. According to IEC/EN 61557-12, the total uncertainty of a measurement, in general, depends on the instrument, the environment, and other elements to be considered.

Note: Requirements for Class 1 active power and energy in IEC/EN 61557-12 regarding limits of uncertainty due to variation of the current for different power factor, and limits of uncertainty due to influence quantities such as temperature are equivalent to IEC 62053-2x standards.

PMD-D - Embedded sensors

Intrinsic uncertainty	Operating uncertainty + measurement uncertainty according to IEC 61000-4-30	Overall system uncertainty : No additional error for PMD-D
Uncertainty under reference conditions	Variations due to influence quantities	0
> More information, see page B-16	> More information, see page B-17	

PMD-S - External sensors

Intrinsic uncertainty	Operating uncertainty + measurement uncertainty according to IEC 61000-4-30	Overall system uncertainty
Uncertainty under reference conditions	Variations due to influence quantities	Uncertainty and variations due to external sensors accuracy and to impedance of wires

PMD-D - Embedded sensors

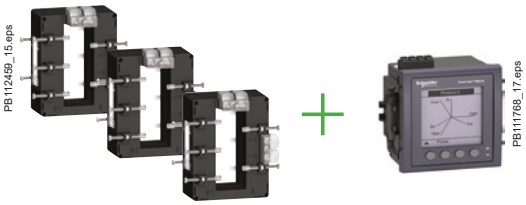

PMD-S - External sensors

B

Intrinsic uncertainty under reference condition

IEC/EN 61557-12 definition:

Intrinsic uncertainty is uncertainty of a measuring instrument when used under reference conditions.
In this standard, it is a percentage of the measured value defined in its rated range and with the other influence quantities under reference conditions.
For MasterPact MTZ with MicroLogic X the main influence quantities are the current and the power factor.
The effect of all other influence quantities are less significant.

MasterPact		MTZ1	MTZ2	MTZ3
Lowest value of the current at which the MTZ starts and continues to register	Ist = 0.4 %Ib	1.6 A	1.6 A	3.2 A
Lowest value of the current to ensure accuracy for Active Power and Energy ≤ 1,5 %	5 %Ib	20 A	20 A	40 A
Lowest value of the current to ensure accuracy for Active Power and Energy ≤ 1 % with PF = 1	10 %Ib	40 A	40 A	80 A
Lowest value of the current to ensure accuracy for Active Power and Energy ≤ 1 % with PF = 0.5 Ind to 0.8 Cap	20 %Ib	80 A	80 A	160 A
Value of the current for which the relevant performances of a direct connected PMD (PMD D●) are fixed	Ib	400 A	400 A	800 A
Highest value of current at which the MTZ meets the uncertainty requirements of this standard	Imax	1600 A x1.2	4000 A x1.2	6300 A x1.2

Intrinsic uncertainty for Active Power and Energy versus current

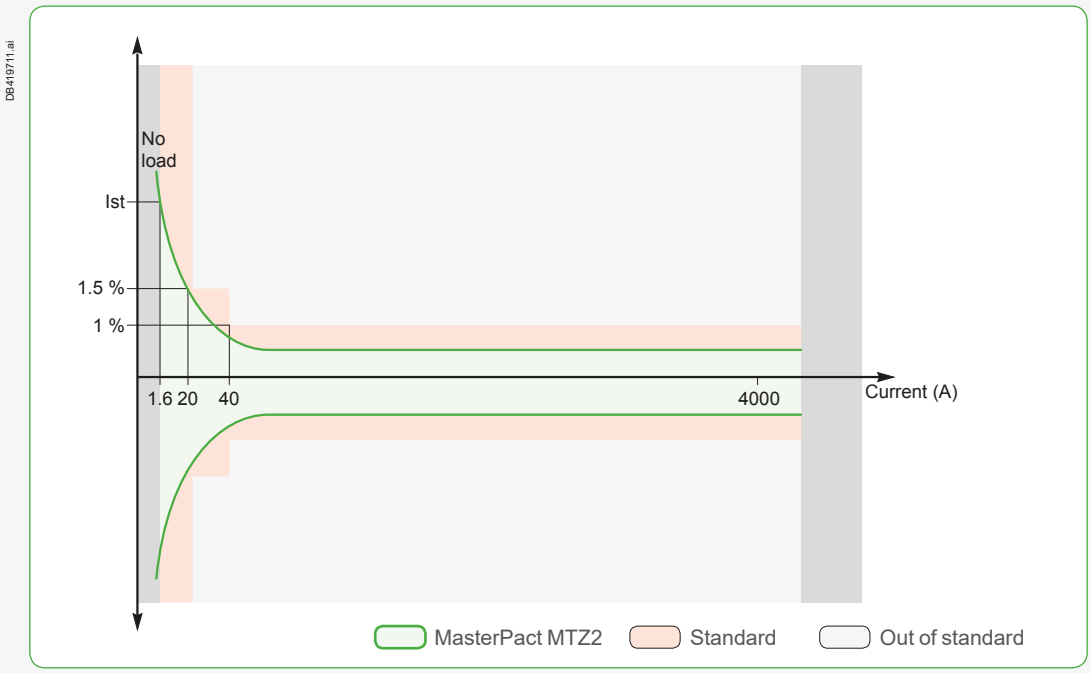

Example: graph for MasterPact MTZ2

B

Operating uncertainty

IEC/EN 61557-12 definition:

Operating uncertainty is uncertainty under the rated operating conditions.
IEC/EN 61557-12 specifies tests and uncertainty maximum variation according to various disturbances such as:
- ambient temperature T°,
- frequency, unbalance, harmonics and EMC.

For MasterPact MTZ with MicroLogic X the main influence quantity is the temperature T°, as MasterPact MTZ is designed to carry high current, the self heating combined with the ambient temperature induces a wide range of operating temperature.
In MasterPact MTZ the measurement has been designed to offer high stability, within this range of temperature.

Effect of T° on MasterPact MTZ measurement performance

The variation of the temperature around the internal current transformer and MicroLogic X processing the measures is a challenge regardless of the ambient temperature, as the internal temperature variation between the minimum current and the nominal current load could be around 90 °K. So the effect of the temperature on accuracy of the measurement has been carefully managed to ensure an operating temperature between -25 and 70 °C.

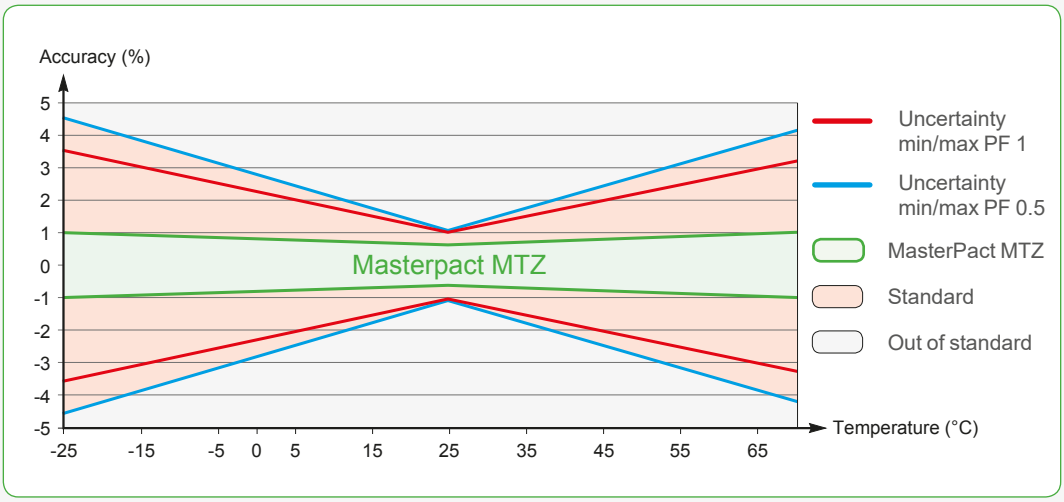

Overall system uncertainty

IEC/EN 61557-12 definition:

Overall system uncertainty is uncertainty including the instrumental uncertainty of several separated instruments, external sensors, external wiring between devices, etc. under the rated operating conditions.

For MasterPact MTZ the overall system uncertainty is non-existent thanks to PMD-DD design with the embedded sensors.

B

Effect of EMC and other disturbances on MasterPact MTZ measurement performances

Thanks to other functions such as protection functions, MasterPact MTZ with MicroLogic X offers by design a high level of immunity to disturbances. Operating uncertainty is very low ensuring a Class 1 in a wide range of operating conditions. The table below summarizes standard requirements and MasterPact MTZ performance regarding these influence quantities :

Influence quantity	Table 9 IEC/EN 61557-12 PMD DD Cl 1 Additional uncertainty variation tolerance		MasterPact MTZ
Ambiant Temperature	PF 1	0.05 % / °K	< 0.01 % / °K
	PF 0.5 Ind	0.07 %/°K	< 0.01 % / °K
Auxiliary voltage power supply	24 V DC ±15 %	0.1 %	0 %
Voltage	PF 1: 80 % / 120 % Un	0.7 %	0 %
	PF 0,5 Ind: 80 % / 120 % Un	1 %	0 %
Frequency	49 Hz 51 Hz / 59 Hz 61 Hz PF 1	0.5 %	0 %
	49 Hz 51 Hz / 59 Hz 61 Hz PF 0.5	0.7 %	0 %
Reversed phase sequence		1.5 %	0 %
Voltage unbalance	0 to 10 %	2 %	0 %
Phase missing	1 or 2 phase missing	2 %	0 %
Harmonic in current and voltage	Un: 10 % harmonic 5 Imax: 20 % harmonic 5	0.8 %	< 0.1 %
	Odd harmonic in current	3 %	< 0.1 %
	Sub harmonic in current	3 %	< 0.1 %
Common mode voltage rejection	0 to 690 V / earth	0.5 %	0 %
Permanent a.c magnetic induction, 0.5 mT	IEC 61326	2 %	0 %
Electromagnetic RF fields	IEC 61326	2 %	< 1 %
Conducted disturbances induced by RF fields	IEC 61326	2 %	< 1 %

B

Compliance with ISO 50001: Reliability and repeatability over time of energy measurement

Scope and main requirements of ISO 50001:

ISO 50001 specifies requirements for systems and organization dedicated to energy management.
This international standard defines rules and gives recommendations to achieve continual improvement of energy performance, including energy efficiency, energy use and consumption, measurements, documentation and reporting. Energy performance shall be monitored and significant deviations shall be investigated. It implies that the accuracy of the instruments used for this purpose remains stable thoughout their entire operating life which ensures the repeatability of the measurements (ISO 50001, clause 4.6 and 4.6.1 Checking, monitoring, measurement and analysis).

In MasterPact MTZ with MicroLogic X , the metering and protection functions are designed to perform accurate and repeatable measurements during MicroLogic X life time, provided it's used in the specified environmental conditions as defined in MasterPact Maintenance Guide. Current sensors and MicroLogic X are calibrated during circuit breaker manufacturing and are not supposed to be re-calibrated during this life time. In general, electronic instrument measuring electric parameters don't request any specific maintenance provided they are working within environmental specifications. Accuracy can be reduced in case of operation under exceptional conditions, lightning strikes, high temperature, high degree of humidity, this is why a periodic verification is recommended (please refer to the annex I of the AFNOR Document FD X30-147: Metrological maintenance recommendations, applicable to electrical and fluidic measurements).

Compliance with IEC 60364-8-1 Sub-clause 8.3.1.1 Requirement on accuracy and measuring range

Scope and main requirements of IEC 60364-8-1:

IEC 60364-8-1 provides requirements and recommendations for the design, erection and verification of low voltage electrical installations including local production and storage of energy for optimizing the overall efficient use of electricity. It introduces recommendations for the design of an electrical installation within the framework of an energy efficiency management approach in order to get low electrical energy consumption and acceptable energy availability. It also specifies the accuracies of the measuring instruments involved in the functions of energy management such as:

- Energy usage analysis and optimization
- Contract optimization
- Cost allocation
- Efficiency assessment
- Energy usage trends assessment.

MasterPact MTZ with MicroLogic X complies with the requirements of IEC 60364-8-1 dedicated to the optimization of energy efficiency. It provides a range of measurements with accuracies required for complex energy efficiency approaches.

The table below from IEC 60364-8-1:2014 Sub-clause 8.3.1.1 "Requirement on accuracy and measuring range" specifies the accuracies required for the measurements dedicated to cost management

	MasterPact MTZ main applications		Intermediate distribution boards	Final distribution board
	Incomer	Main LV switchboard		
Measurement objectives for cost management	■ Revenue metering ■ Bill checking ■ Energy usage analysis and optimization ■ Contract optimization ■ Regulatory compliance	■ Cost allocation ■ Energy usage analysis and optimization ■ Efficiency assessment ■ Contract optimization ■ Regulatory compliance	■ Cost allocation ■ Energy usage analysis and optimization ■ Efficiency assessment ■ Contract optimization ■ Regulatory compliance	■ Energy usage analysis and optimization ■ Energy usage trends assessment
Overall system accuracy of active energy measurement	In general, excellent accuracy, e.g. Class 0.2 to Class 1	In general, good accuracy, e.g. Class 0.5 to Class 2	In general, medium accuracy, e.g. Class 1 to Class 3	In general, reliable indication should be more important than accuracy

B

Appendix: abstract of IEC/EN 61557-12

Electrical safety in low voltage distribution systems up to 1000 V AC and 1500 V DC, equipment testing, measuring or monitoring of protective measures - Part 12: Performance measuring and monitoring devices (PMD).

According to this standard a PMD is a combination in one or more devices of several functional modules dedicated to measuring and monitoring electrical parameters in energy distribution systems or electrical installations.
A PMD can be used in connection with sensors.

Current measurement / Voltage measurement		Sensor operated PMD - Current sensors out of PMD > PMD S●	Direct connected PMD - Current sensors in PMD > PMD D●
Direct connected PMD - Voltage sensors in PMD	**> PMD ●D**	PMD-SD Semi-direct insertion	**PMD-DD Direct insertion: MasterPact MTZ**
Sensor operated PMD - Voltage sensors out of PMD	**> PMD ●S**	PMD-SS Indirect insertion	PMD-DS Semi-direct insertion

PMD-DD: MasterPact MTZ with MicroLogic X and embedded sensors

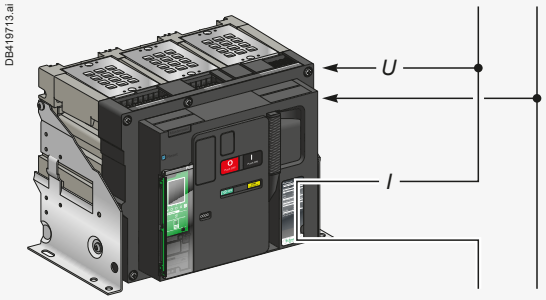

Class of temperature: Table 6 of IEC/EN 61557-12

	K55 temperature Class of PMD	MasterPact MTZ K70 temperature Class of PMD	Kx [1] temperature Class of PMD
Rated operating range (with specified uncertainty)	-5 °C to +55 °C	**-25 °C to +70 °C**	Above +70 °C and/or under -25 °C [2]
Limit range of operation (no hardware failures)	-5 °C to +55 °C	**-25 °C to +70 °C**	Above +70 °C and/or under -25 °C [2]
Limit range for storage and shipping	-25 °C to +70 °C	**-40 °C to +85 °C**	Acc. to manufacturer specification [2]

[1] Kx stands for extended conditions.
[2] Limits are to be defined by manufacturer according to the application.

Measurement

Type of measurement	Symbol	Accuracy	Range min acc	Range max acc	Unit	EHMI	FDM 128	Smartphone EcoStruxure Power Commission, EIFE IFE, IFM
Currents								
RMS current of phases	I1, I2, I3, Iavg	±0.5 %	40 [6]	4 000 x 1.2 [6]	A	●	●	●
Voltages								
RMS phase-to-phase voltage	V12,V23,V31, VLL average	±0.5 %	208	690 x 1.2	V	●	●	●
RMS phase-to-neutral voltage	V1N, V2N, V3N, VLN average [2]	±0.5 %	120	400 x 1.2	V	●	●	●
Power and energy								
Active power	P1, P2, P3, Ptot	±1 %	5	10 000	(±) kW	●	●	●
Reactive power	Q1, Q2, Q3, Qtot	±2 %	5	10 000	(±) kVAR	●	●	●
Apparent power	S1, S2, S3, Stot	±1 %	5	10 000	kVA	●	●	●
Power factor	PF	±0.02	-1	1		●	●	●
Power factor / Phase	PF1, PF2, PF3	±0.02	-1	1		⊗	●	●
Fundamental power factor (cos φ or DPF)	Cos φ	±0.02	-1	1		●	●	●
Fundamental power factor (cos φ or DPF) / Phase	Cos φ1, Cos φ2, Cos φ3	±0.02	-1	1		⊗	●	●
Active Energy resetable [7]	Ep IN / OUT / total [3]	±1 %	0	10 000 000	kWh	●	●	●
Reactive Energy resetable [7]	Eq IN / OUT / total [3]	±2 %	0	10 000 000	kVARh	●	●	●
Apparent Energy resetable [7]	Es	±1 %	0	10 000 000	kVAh	●	●	●
Active Energy not resetable [8]	Ep IN / OUT / total [3]	±1 %	0	10 000 000	kWh	⊗	●	●
Reactive Energy not resetable [8]	Eq IN / OUT / total [3]	±2 %	0	10 000 000	kVARh	⊗	●	●
arent Energy not resetable [8]	Es	±1 %	0	10 000 000	kVAh	⊗	●	●
W.A.G.E.S (Water, Air, Gaz, Electricity, Steam) with digital inputs of I/O module						⊗	●	●
Current and power demands								
Current demands	I1, I2, I3, IN, Iavg	±0.5 %	40 [6]	4 000 x 1.2 [6]	A	⊗	●	●
Total active power demand	Ptot	±1 %	5	10 000	(±) kW	⊗	●	●
Total reactive power demand	Qtot	±2 %	5	10 000	(±) kVAR	⊗	●	●
Total apparent power demand	Stot	±1 %	5	10 000	kVA	⊗	●	●
Power quality								
Frequency	F	±0.005 Hz	40	70	Hz	●	●	●
Phase sequence (0: a,b,c /1,2,3 - 1: a,c,b /1,3,2)	Phase sequence	NA	1 2 3	1 3 2	0 - 1	●	●	●
RMS current on neutral	IN [1]	±1 %	40 [6]	4 000 [6]	A	●	●	●
RMS current on ground current	Ig	±5 %	40 [6]	4 000 [6]	A	●	●	●
RMS current on earth leakage	IΔ (with MicroLogic 7.0 X)	±10 %	0.1	30	A	●	●	●
THDI Current phase	ITHD I1, I2, I3, Iavg	Cl 5 [9]	0 %	100 % [4]	% [4]	● [5]	●	●
THDI I neutral	ITHD IN [1]	Cl 5 [9]	0 %	100 % [4]	% [4]	● [5]	●	●
THDV Phase to phase voltage	VTHD V12,23,31, LLavg	Cl 2 [9]	0 %	20 % [4]	% [4]	● [5]	●	●
THDV phase-N voltages	VTHD V1N,2N,3N, LNavg [2]	Cl 2 [9]	0 %	20 % [4]	% [4]	● [5]	●	●
Current unbalance vs average 3 phase RMS currents	I_unbal 1,2,3, Iunbal (worst)	+5 %	0 %	100 %	%	●	●	●
Phase to phase voltage unbalance	VLL_Unbal 12 23 31 unbal	Cl 0.5	0 %	10 %	%	●	●	●
Phase to Neutral voltage unbalance	VLN_Unbal 1N, 2N 3N, unbal [2]	Cl 0.5	0 %	10 %	%	●	●	●

[1] Neutral current available only with 4 poles circuit breakers or 3 poles circuit breakers with External Neutral Current Transformer (ENCT).
[2] Phase to neutral voltage available only with 4 poles circuit breakers or 3 poles with VN terminal connected to Neutral.
[3] IN+OUT or IN-OUT according to setting.
[4] THD is calculated refering to fundamental or RMS value.
[5] Detail per phase is not displayed on EHMI.
[6] 40 to 1600 A x1.2 for MTZ1, 40 to 4000 A x1.2 for MTZ2, 80 to 6300 A x1.2 for MTZ3.
[7] With reset.
[8] Without reset.
[9] According IEC/EN 61557-12.

● Available
⊗ Not available

Note: MicroLogic X log and time stamp minimum and maximum values since last reset of all relevant measurements. Main max values may be read on embedded HMI (Currents, Voltages, Frequence, Ptotal, Qtotal, THDIavg, THDVavg,THDIN ...). For complete list of measurements and min / max values, see MicroLogic X control unit User guide.

Maintenance & diagnostics

Electrical power supply availability and reliability are the main critical issues affecting profitability and competitiveness. Outage management focuses on preventing, detecting, locating and clearing of faults.
Operation and maintenance are mandatory to keep performance of electrical installations at the highest level and to ensure that the system users are prepared to manage any crisis that may arise.

DB421333.ai

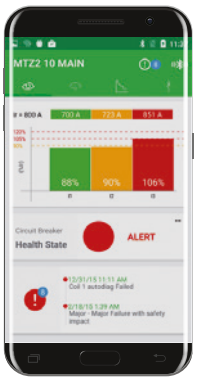

DB421334.ai

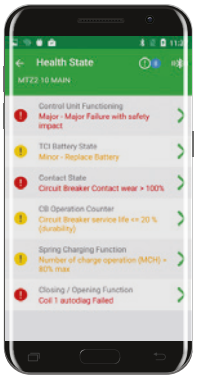

DB421332.ai

The MicroLogic X control units perform in real time a high level of diagnostics on MasterPact MTZ circuit breakers. They generate and store appropriate alarms and messages to help the users with maintenance and power restoration.
This function complies with the following end user values:
- Prevent power shutdown to optimize uptime
- Restart quickly after a trip to reduce downtime
- Repair to recover performance of the breaker.
- Edit maintenance reports to record status of the equipment.

Prevent power shutdown

Prevention of unscheduled power shutdown requires to:
- Carry-out a preventive maintenance plan
- Be alerted of the health of the circuit breaker
- Anticipate components/device replacement

Carry-out a preventive maintenance plan
- As standard, MicroLogic X periodically reminds the end-users to schedule either basic end-user maintenance program or standard end-user maintenance program or manufacturer maintenance program.
- Basic End-User maintenance can be performed by Services Provider. The frequency of this program is every year or every it can be extended to two years if the device operate in favourable enviromental conditions. The scope is Visual inspection and functional testing (push to trip).
- Standard End-User maintenance can be performed by Services Providers. The frequency of this program is every 2 years or it can be extended to four years if the device operate in favourable enviromental conditions. The scope is in addition of basic program: automatic protection curve testing, operational servicing and sub-assembly test.
- Manufacturer maintenance can be performed by a Schneider Electric Field Service representative on request. The frequency of this program is per default every 5 years (within normal operating and environmental conditions, and low criticality of user application). The scope is in addition of standard program: complete evaluation of the device performance and data diagnostic (Measure of the insulation resistance, opening/closing time…) and diagnostic.

MicroLogic X and Ecostruxure Power Device App app display the last and the next maintenance program to be performed. Details of the maintenance program are described in the MasterPact MTZ Maintenance Guide (DOCA0099EN). Basic and standard end-user maintenance program can be performed by Services Provider. Maintenance program can be performed by a Schneider Electric Field Service representative on request.

Be alerted of the health of the circuit breaker
As standard, the MicroLogic X control unit is equipped with a "Service" LED to alert the user to the overall health of the circuit breaker and when to perform maintenance. This LED, represented by a "wrench / spanner", can have 3 states:
- unlit LED: the circuit breaker is in good working order,
- orange LED: non-urgent intervention required (contact wear above 60 %, Voltage release (MN, MX, XF) operations is above alarm threshold, Remaining service life of MicroLogic is below alarm threshold, schedule standard maintenance within one month…),
- red LED: alarm message that requires immediate intervention (contact wear above 100 %, Voltage release (MN, MX, XF) reached the max number of operations, MicroLogic has reached the max service life, failure of the tripping chain, malfunction of the control unit…).

The associated alarms are displayed on the embedded HMI. The alarms requiring non-urgent intervention are displayed with an orange backlight, the alarms requiring immediate intervention and trip with a red backlight.
The information is also accessible from a smartphone with Bluetooth or NFC wireless communication, a PC running EcoStruxure Power Commission software.
When the MicroLogic X control unit is not energized only the trip alarms with their associated messages remain accessible with a smartphone through NFC.
The various possibilities to display alarms and messages concerning the management of maintenance and the health of the circuit breaker are summarized in the following table (on the next page):

MicroLogic X control unit energized							MicroLogic X control unit not energized
	Display on EHMI Alarm ⚠	Display on EHMI Alarm	Display on smartphone with Bluetooth	EcoStruxure Power Commission software USB connection	Display on FDM128	IFE/EIFE web pages	Display trip alarm on smartphone with NFC
Alarms	Orange BACKLIGHT	⊗	◉	◉	◉	◉	⊗
Alarms	⊗	Red BACKLIGHT	◉	◉	◉	◉	◉

DB419581.ai

DB419582.ai

Anticipate components/device replacement
As standard, MicroLogic X monitors most of the active mechanical components (circuit breaker, chassis and MCH gear motor to charge the spring mechanism) as well as the electrical ones (MN, MX1, MX2, XF voltage release) and the MicroLogic control unit itself. In addition, MicroLogic X calculates contact wear ratio based on number of operation and tripping current. MicroLogic X and Ecostruxure Power Device App app display the remaining service life of the circuit breaker and the MicroLogic X control unit. It displays as well, the number of operations of the actuators (MCH, XF, MN, MX1, MX2) and the contact wear. Alarms helps the users to anticipate the replacement of these circuit breaker components. Mechanical and electrical components of the breaker can be replaced by Services Provider. MicroLogic control unit can be replaced by a Schneider Electric Field Service representative on request.

Restart Quickly after a trip

As standard, the LEDs on the front of the MicroLogic X control unit allow to quickly identify the tripping cause (short-circuit, earth fault or overload). MicroLogic X and Ecostruxure Power Device App app display all the relevant information related to the trip (tripping cause, date and time, tripping current, settings of the protection).
As option:
- Power restoration assistant digital module assists the maintenance operator on power restoration procedure.
- MasterPact operation assistant digital module allows the maintenance operator to close and open the circuit breaker from a distance of few meters.
- Wave form capture digital module automatically logs current and voltage cycles in case of trip. At a glance, it helps to understand the nature and the gravity of the trip event.

Repair

Repair of circuit breaker components requires:
- The right level of assistance
- The precise identification of the circuit breaker and its associated spare parts

Assistance

As standard, MicroLogic X and Ecostruxure Power Device App app display the name and phone number of the Services Provider who performed the last maintenance.

Identification

By scanning the QR code displayed on the front face of the MicroLogic X control unit, users will have access to:
- Serial number of the MicroLogic X control unit
- Bill Of Material (as built) of the circuit breaker and the optional accessories installed on the circuit breaker
- Product code in order to be able to reorder the identical circuit breaker.
- References of the spare parts
- Link to download user guides and Instruction Service.

In addition, to ensure the level of performance of the circuit breaker, Schneider Electric proposes the three following services: warranty on components, extension of warranty, maintenance on demand or advanced service plans. For more information, please refer to Services (section H).

Edit maintenance reports

As standard, MicroLogic X control unit provides all the relevant information (product ID, protection settings, configuration parameters, logs, trip context) in order for EcoStruxure Power Commission software to edit maintenance report. To plan, edit report and track maintenance intervention, you may use EcoStruxure Facility Expert App.

B

Prevent power shutdown with conditional checks

Monitored functions & Logs Circuit breaker operation

Elect. Closing function	Elect. Opening function	Tripping function
■ Invalid self-test XF voltage release ■ XF voltage release not detected ■ Closing inhibited by communication ■ Closing inhibited through IO module ■ Closing counter by MN	■ Invalid self-test MX2 voltage release ■ MX2 voltage release not detected ■ Invalid self-test MX1 voltage release ■ MX1 voltage release not detected ■ Invalid self-test MN voltage release ■ MN voltage release not detected ■ Voltage loss on MN undervoltage release ■ Opening counter by MN, MX1 or MX2	■ Tripping chain continuity (Ready LED) ■ Trip counter by Mitop (SDE) ■ Time stamped tripping log ■ Trip counter for Ir, Isd, Ii, Ig, IΔn

Monitored functions & logs Fault detection on MicroLogic X

Sensors Disconnection	MicroLogic X internal failure	External Communication failure
■ Internal current sensor disconnected ■ External current sensor disconnected ■ Earth leakage (Vigi) Sensor disconnected	■ ASIC over temp ■ ASIC internal failure ■ Unable to read sensor plug ■ Internal battery ■ Tripping voltage release (Mitop) not detected	■ invalid NFC communication ■ invalid Bluetooth communication ■ invalid IEEE 802.15.4 communication ■ Ethernet Error communication (IFE) ■ I/O module

B

Preventive maintenance

Maintenance alarm

Closing function	Opening function	Maintenance program reminder
■ XF operations is above alarm threshold ■ XF reached the max number of operations ■ MCH charging operations is above alarm threshold ■ MCH has reached the max number of operations	■ MX1 operations is above alarm threshold ■ MX1 reached the max number of operations ■ MX2 operations is above alarm threshold ■ MX2 reached the max number of operations ■ MN operations is above alarm threshold ■ MN reached the max number of operations	■ Schedule Basic maintenance within one month ■ Schedule Standard maintenance within one month ■ Schedule Manufact. maintenance within three months

Circuit breaker	MicroLogic X
■ Remaining service life of circuit breaker is below alarm threshold ■ Circuit breaker reached the max number of operations ■ Contact wear >60% Check contacts ■ Contact wear >95% Plan replacement ■ Contact wear >100% Replace circuit breaker	■ Remaining service life of MicroLogic is below alarm threshold ■ MicroLogic has reached the max service life ■ Protection settings still set on factory default settings 6 months after commisionning

Event Management

From all the functions processed by MicroLogic X a list of predefined events has been selected for user notification of alarms, and traceability. All these events are time stamped and logged in non volatile memory.
For ease of use these events have been classified in seven histories: Trip, protection, diagnostic, metering, configuration, operation, and communication.

Event history	Maximum number of events
Trip	50
Protection	100
Diagnostic	300
Metering	300
Configuration	100
Operation	300
Communication	100

DB421335.ai

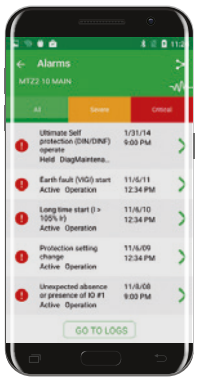

DB421336.ai

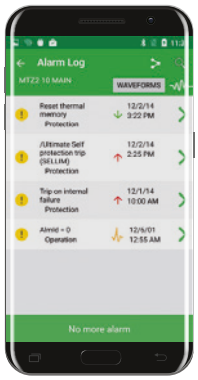

Definition and categories of events

In addition to their main action of tripping, measuring, and counting, MicroLogic X functions produce events available for alarm notification and history logging.

Event characteristics

All events are time stamped and logged in non-volatile memory.

Event history

All events are logged in one of the histories of the Microligc X control unit:
- trip : Long-time trip, short-time trip, trip on internal failure ...
- protection : Setting change, I > 90 % Ir Long time, change from set A to set B ...
- diagnostic : Voltage release failure, low battery ...
- metering : reset min/max, reset energy counters…
- configuration : Digital module license …
- operation : Opening, closing, alarm reset...
- communication : Bluetooth enable ...

All events are logged regardless of their severity, including low-level events. Each history has a predefined maximum size. When a history is full each new event overwrites the oldest event, and other histories are left unchanged (FIFO).
For the complete list of events see MicroLogic X user guide.

Event notification

- High severity events generate pop-ups on embedded HMI with a red backlight
- Medium severity events generate pop-ups on embedded HMI with an orange backlight.
- On the FDM128 display unit they change the related pictogram colour to orange.
- All events can be addressed individually or by group to digital output (M2C or I/O module)
- All events can trigger an email through EIFE or IFE communication interfaces.
- High and medium severity active events can be read on the embedded HMI, a PC or a smartphone
- All the events logged in histories can be displayed on a PC with EcoStruxure Power Commission, a smartphone or on the FDM128 display unit. They are displayed in chronological order. They can be sorted according to the following selections: date and time, severity, or history.
- Additionally, all the events logged in histories are accessible via Ethernet and Modbus SL through the EIFE, IFE and IFM interfaces.

Event type and latch mode

They are two types of events:
- Occurence / Completion events: These events have a beginning and an end (for example Long-time pick-up and dropout).
- Instantaneous events: These events have no duration (for example reception of an opening order, breaker tripping or settings changes).

An event may be latched or unlatched:
- A latched event does not reset automatically. It remains in held position after its cause has disappeared until it is reset by the user.
- An unlatched event is active while its cause is present and returns to inactive as soon as its cause disappears or is resolved.

For latched events a reset action can be made from:
- The test/reset button on the front face of the MicroLogic X.
- From a PC
- From a smartphone
- Via Ethernet and Modbus SL through the EIFE, IFE and IFM interfaces

A command from test/reset button, a PC, a Smartphone, Ethernet and Modbus SL resets all the held events managed by MicroLogic X.

Event Management

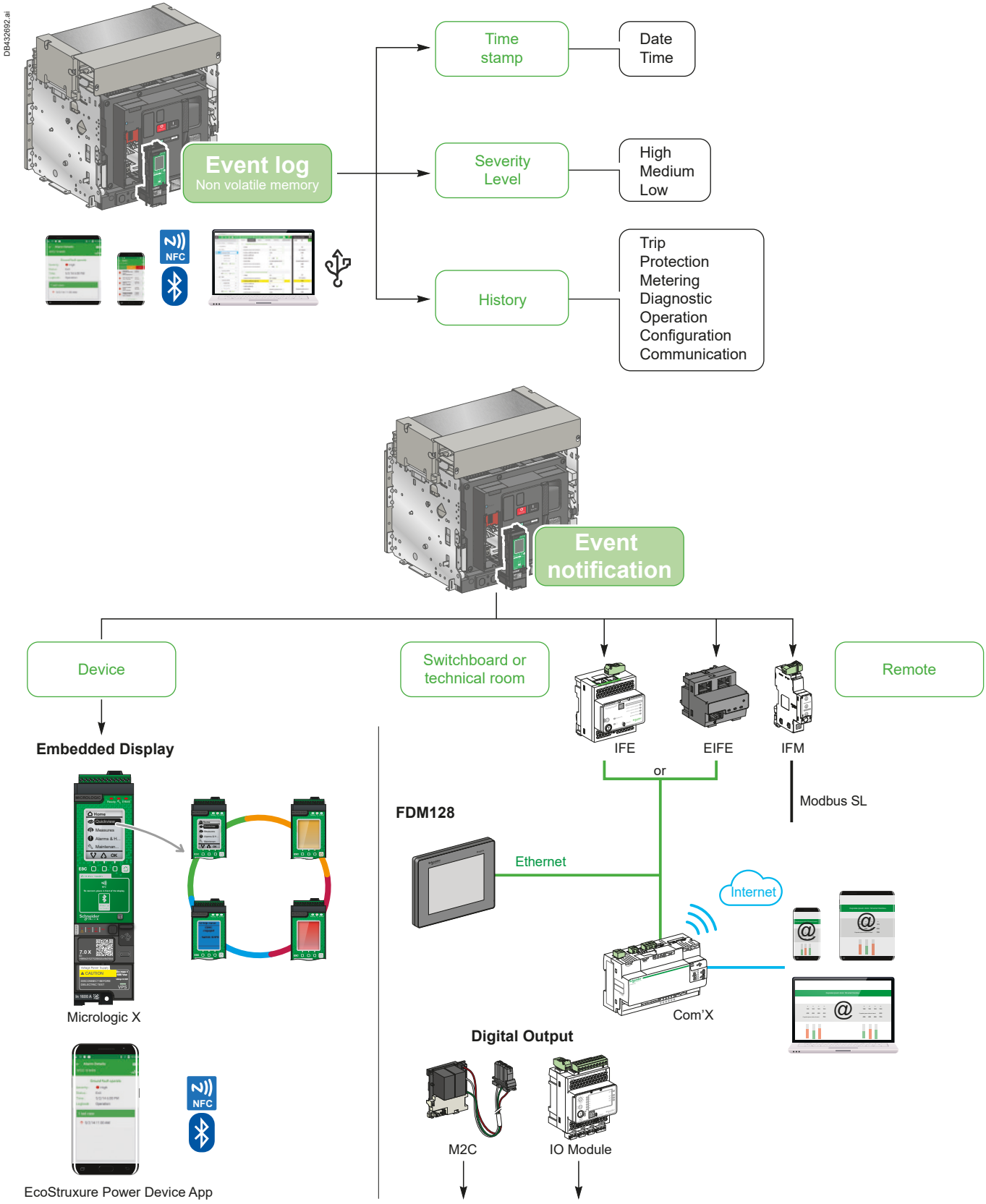

Power supply

MicroLogic X is a self-powered protection control unit. The basic functions of protection (LSIG)do not require any power supply. Below 20 % of the rated current a 24 V dc supply or the VPS module is needed to ensure the proper operation and all the specified performances of MicroLogic X for the measurement, diagnosis, display and communication functions.

MicroLogic X is equipped with a robust internal power supply as well as various alternative external power supplies to cover the needs in any situation.
MicroLogic X control unit combines five possible sources of supply:
- The internal currents provided by the embedded current transformers,
- The internal voltages through the VPS module, up to 600 V AC,
- An external 24 V DC power supply,
- A PC supply via the mini USB port,
- An external portable battery connected to the mini USB port.

When the currents are higher than 20 % of the rated current, the internal current supply ensures the proper operation of the MicroLogic X control unit.
This includes:
- The accurate performance of the protection functions, i.e. Long-time overload protection, Short-time short circuit protection, Instantaneous short circuit protection, Earth fault protection
- All the measures with the accuracies specified page B-21 of this catalog
- The diagnosis
- The HMI (Embedded display and key pad)
- The wireless features (Bluetooth and proprietary connectivity).

When the currents fall below 20 % of the rated current, the internal current supply is not enough to ensure the proper operation of the MicroLogic X control unit.
The internal voltage supply through the VPS module or an external 24 V DC power supply is required to ensure the operation of all the functions processed by MicroLogic X with the specified performances.

The following 24 V DC supplies are recommended
- The external 24 V DC power supply (AD) with or without an additional battery module
- The Universal Phaseo ABL8 RPS 24050 (24 V DC, 5 A , 120 W) or ABL8 RPS 24030 (24 V DC, 3 A, 72 W) power supplies.

The input voltage of the VPS module is limited to 600 V. The module is directly connected to the internal pick up voltage on the bottom side of the circuit breaker. For voltage above 600 V the VPS module shall be supplied from an external voltage by means of the PTE option and voltage transformers.
The external voltage can be picked up either from the top or the bottom side of the circuit breaker.

The MicroLogic X voltage inputs used for the voltage and power measurements are limited to 690 V, taking into account the maximum input voltage of the VPS module. The PTE option with external voltage transformers shall consequently be selected for the following situations:
- Applications > 690 V without VPS module
- Applications >600 V with VPS module.

To maintain the operation of the earth leakage protection for any load situations, the MicroLogic 7.0 X is delivered with the VPS power supply module.

When the circuit breaker is open or not energized after tripping or during setting, commissioning, testing or maintenance, the VPS module is not supplied. The possible solutions to supply power to the MicroLogic X are the following:
- An external 24 V DC
- A PC through the mini USB port
- An external mobile portable battery connected on the mini USB port .

MicroLogic X is also equipped with an internal unit battery dedicated to the supply of the trip cause LEDs and the internal real-time clock. It allows the user to read and identify the trip cause when the breaker trips .The battery is lithium type with a service life of approximately ten years. The battery condition can be checked by pressing the test button on the front of the MicroLogic X control unit. An alarm is issued when the voltage of the battery reaches its low level.

When EIFE, IFE or IFM communication modules, I/O modules or FDM128 display unit are installed, an external 24 V DC power supply is mandatory to supply power to these devices.

The XF, MX, MN, XF diag&com, MX diag&com, MN diag voltage release and the electric motor MCH require a power supply separate from the MicroLogic X power supply.

The optional protections provided by the optional digital modules require the MicroLogic X control unit to be supplied by an external 24 V DC power supply.

Recommended selection of alternative power sources in different situations

Situation	Purpose	VPS	External 24 V DC power supply	PC supply	Portable Battery
When the circuit breaker is energized, but the current is below 20 % of the rated current	Ensure the performance of protections, measurements, communication, diagnosis, HMI, wireless features	●	●	○	○
When the circuit breaker is opened or not energized	Retrieve information through MicroLogic HMI	○	●	●	●
	Retrieve information through Bluetooth	○	●	●	●
During setting, commissioning, testing and maintenance	Perform all relevant actions	○	●	●	●
When IFE/EIFE, I/O, IFM or FDM128 are installed	Power these devices	○	●	○	○

Note: Please refer to accessory chapter for more details concerning VPS module, external 24 V DC supply, portable battery

	MicroLogic X		EIFE	IFE	I/O module	FDM128
	without M2C/ ESM	with M2C/ ESM				
Power comsumption (mA) 24 V DC	250	300	100	150	165	283

Voltage measurement inputs

The PTE option can be connected either on the top side or on the bottom side of the circuit breaker.
The power source can indifferently be connected on the top side or on the bottom side of the circuit breaker.
Consequently, when the power source and the PTE option are connected on the same side of the circuit breaker, the MicroLogic X control unit is energized as soon as the power source is live, whatever the position of the circuit breaker (open or closed).

The possible VT ratios are the following:
- primary range:
  - Min value: 100 V
  - Max value 1250 V
- secondary range:
  - Min value: 100 V
  - Max value: 690 V.
  - recommended values: 220-400 V
- Power ⩾ 10 VA.

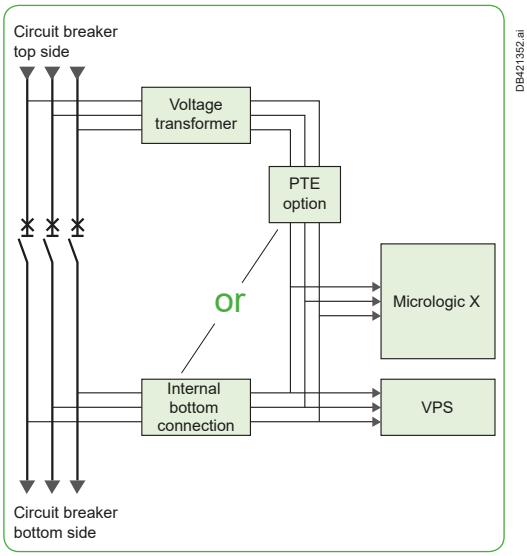

Note: PTE option connected on the top side of the circuit breaker. It can also be connected on the bottom side.

B

Customize your MicroLogic X with digital modules

Overview of digital modules C-2
Optional protections C-4
ANSI 27/59 - Under/Over voltage protection C-5
ANSI 81 - Under/Over frequency protection C-6
ANSI 32P - Reverse active power protection C-7
ANSI 51N/51G - Ground-fault alarm C-8
ERMS - Energy Reduction Maintenance Settings C-9
Energy per phase C-10
Individual harmonics analysis C-11
Power restoration assistant C-12
MasterPact operation assistant C-13
Waveform capture on trip event C-14
Modbus legacy dataset C-15

C

Other chapters

Select your circuit breakers and switch-disconnectors A-1
Select your MicroLogic X control unit B-1
Customize your circuit breaker with accessories D-1
Integrate in Smart panels - Architecture and systems E-1
Integrate in switchboard F-1
Integrate in special applications - Source-changeover systems G-1
Services H-1
Order your circuit breaker I-1

Overview of digital modules

11 optional digital modules to digitally customize MicroLogic X. Optional digital modules can be purchased through GoDigital store open 24/7.

> Go to GoDigital store

C

GoDigital store allows you to purchase optional digital modules to customize your MicroLogic X control units that have already been installed in MasterPact MTZ circuit breakers. The proposed digital modules are dedicated to optional protections, measurement and Maintenance & diagnostics functionalities.

With GoDigital store open 24/7, Panel Builders have the flexibility to further customize the MicroLogic X features at the last minute before commissioning the switchboard. Electrical contractors and facility managers can upgrade the install base during operational phase of product life cycle, according to new requirements, anytime, without changing the hardware or disrupting operations.

The MicroLogic X control unit firmware greater than or equal V003.000.XXX is compatible with the 11 proposed digital modules.

The MicroLogic X control unit firmware V001.000.XXX support only the Power restoration assistant, the MasterPact operation assistant, the Energy per phase and the Waveform capture on trip event. It needs to be upgraded to be compatible with the other digital modules.

The MicroLogic X control unit firmware V002.000.XXX support in addition ANSI 27/59 - Under/Over voltage, ANSI 32P - Reverse active power, ANSI 51N/51G - Ground fault alarm, ERMS - Energy Reduction Maintenance Settings, Individual harmonics analysis and Modbus legacy dataset. It needs to be upgraded to be compatible with the other digital modules.

DB421338.ai

Overview of digital modules

Protection

Increase people & property protection

Optional protections

ANSI 27/59 - Under/Over voltage
> see page C-5

ANSI 81 - Under/Over frequency
> see page C-6

ANSI 32P - Reverse active power
> see page C-7

ANSI 51N/51G - Ground fault alarm
> see page C-8

ERMS - Energy Reduction Maintenance Settings
> see page C-9

Measurement

Monitor energy & power quality

Cost Management

Energy per Phase
> see page C-10

Power Quality

Individual harmonics analysis
> see page C-11

Maintenance & diagnostics

Secure uptime, plan maintenance and reduce downtime

Power outage

Power restoration assistant
> see page C-12

MasterPact operation assistant
> see page C-13

Wave form capture on trip event
> see page C-14

Communication

Modbus legacy dataset
> see page C-15

Optional protections

The MicroLogic X control unit can be customized with optional protections at any time, without operation disruption and without additional hardware.
The optional protections: undervoltage, overvoltage, underfrequency, overfrequency, reverse active power, ground-fault alarm and Energy Reduction Maintenance Settings allow to improve the monitoring and the operation of electrical networks. They are generally used in abnormal or critical situations to initiate appropriate actions to safeguard the operation of electrical installations.

PB119220.eps

Optional protections are available whatever the type of MicroLogic X control unit selected. These protections require the MicroLogic X control unit to be supplied by an external 24 V DC power supply.
Each of the optional protections has an adjustable time-delay. The time-delay starts as soon as the protection picks up. Each of the optional protections has the following protection settings parameters:

- mode

ON: Protection is enabled
OFF: Protection is disabled

- action

Trip : tripping order shall be sent to the tripping voltage release in order to open the breaker
Alarm: no tripping order, alarm only

- Inhib

Inhibition disable: optional protection cannot be inhibited
Inhibition enable: optional protection can be inhibited by using an input of the IO module. The inhibition inhibits all the optional protections that have the inhibition setting enabled and therefore the operate event shall not be generated.
Each of the optional protections generates the following events:

- When set in “alarm” mode:
  - Start event when the protection picks up
  - Operate event when its associated time-delay elapses
- When set in “trip” mode:
  - Start event when the protection picks up
  - Operate event when its associated time-delay elapses
  - Trip order event when the circuit breaker tripping voltage release (MITOP) activates.

The start event is generated even if the protection is inhibited. The operate event and the trip order event are generated only when the protection is not inhibited.

Each of the optional protections can be set as follows:

- From a smartphone via Bluetooth
- From a PC running EcoStruxure Power Commission.

ANSI 27/59 - Under/Over voltage protection

The voltage in electrical installations must be maintained within accepted operating levels to minimize the risk of damage to motor loads, sensitive electronics, and to ensure the proper operation and performance of all loads. Generally the allowed rated operating range of voltage is ±10 %. The ANSI 27/59 - Under/Over voltage protection digital module allow the system voltage to be permanently monitored. If the voltage level of an installation goes out of its acceptable limits, the information delivered by this digital module can be used to initiate appropriate action to restore good operating conditions in the installation.

Description

The ANSI 27/59 - Under/Over voltage protection digital module is used to generate either an alarm or a trip. For each undervoltage protection, ANSI 27 and overvoltage protection, ANSI 59, we can choose to monitor either the three phase-to-phase voltages V12, V23, V31, or the three phase-to-neutral voltages V1N, V2N, V3N.
The selection applies for both under and overvoltage protections. It is not possible to select phase-to-phase voltages for undervoltage monitoring and phase-to-neutral voltages for overvoltage monitoring and vice versa. There are four independant protections : 27-1, 27-2 and 59-1, 59-2. For 27-1 and 59-1 the protection picks up when one of the three monitored voltages reaches its upper or lower limit. For 27-2 and 59-2 the protection picks up when the three monitored voltages have reached their upper or lower limit. Under and overvoltage protections operate according to a definite time characteristic. One adjustable time-delay is associated to each of the four elements 27-1, 27-2, 59-1, 59-2.
The time-delay starts as soon as the protection picks up. Each element generates the start, operate and trip events as described page C-4 . When the undervoltage protection is set in tripping mode, the voltage measurement must be performed on the power source side to allow the circuit breaker closing. As standard, the MicroLogic X voltage input is directly connected to the internal pickup voltage on the bottom side of the circuit breaker.

Details of required power connections :
- if the circuit breaker is bottom-fed, the internal pickup voltage is suitable for undervoltage protection and circuit breaker closing.
- if the circuit breaker is top-fed, an external voltage input is required. The PTE option must be selected to perform the voltage measurement on the power source side.

The protection trips if all below conditions are met:
- the value of voltage exceeds the setting
- the associated timer is elapsed.

Benefits

The undervoltage and overvoltage protections are suitable for generator use.
The permanent monitoring of phase-to-phase or phase-to-neutral voltages enables appropriate action to be initiated to safeguard the operation of the installation during abnormal or critical situations, for example: load shedding, source change-over, and emergency generator starting.

MicroLogic 2.0 X - 5.0 X - 6.0 X - 7.0 X

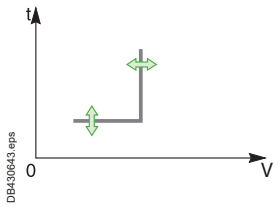

Under Voltage	ANSI 27	
27-1 Voltage setting (Vmin1) V12,V23,V31 or V1N,V2N,V3N	Accuracy: ±0.5 %	20 to 1200 V by step of 1 V
Protection picks up when one of the three monitored voltages reaches the setting		
Time setting (tVmin1)	Max breaking time: 140 ms (with time delay set to 0) accuracy: ±2 %	0 to 300 s, by step of 0.01s
27-2 Voltage setting (Vmin2) V12,V23,V31 or V1N,V2N,V3N	Accuracy: ±0.5 %	20 to 1200 V by step of 1 V
Protection picks up when the three monitored voltages have reached the setting		
Time setting (tVmin2)	Max breaking time: 140 ms (with time delay set to 0) accuracy: ±2 %	0 to 300 s, by step of 0.01s

MicroLogic 2.0 X - 5.0 X - 6.0 X - 7.0 X

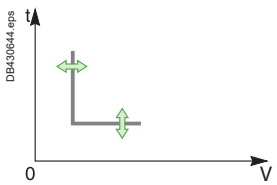

Over Voltage	ANSI 59	
59-1 Voltage setting (Vmax1) V12,V23,V31 or V1N,V2N,V3N	Accuracy: ±0.5 %	20 to 1200 V by step of 1 V
Protection picks up when one of the three monitored voltages reaches the setting		
Time setting (tVmax1)	Max breaking time: 140 ms (with time delay set to 0) accuracy: ±2 %	0 to 300 s, by step of 0.01 s
59-2 Voltage setting (Vmax2) V12,V23,V31 or V1N,V2N,V3N	Accuracy: ±0.5 %	20 to 1200 V by step of 1 V
Protection picks up when the three monitored voltages have reached the setting		
Time setting (tVmax2)	Max breaking time: 140 ms (with time delay set to 0) accuracy: ±2 %	0 to 300 s, by step of 0.01 s

ANSI 81 - Under/over frequency protection

The frequency in electrical installations must be maintained within accepted operating levels to minimize the risk of damage to motor loads, sensitive electronics, and to ensure the proper operation and performance of all loads. Generally, the allowed rated operating range of frequency is ±10 %. The ANSI 81- Under/Over frequency protection digital module allows the frequency to be continuously monitored. If the frequency level of an installation goes out of its acceptable limits, the information delivered by this digital module can be used to initiate appropriate action to restore good operating conditions in the installation.

PB119271.eps

Description

The ANSI 81 – Under/Over frequency protection digital module is used to generate either an alarm or a trip. There are two independent protections: underfrequency (ANSI 81U) and overfrequency (ANSI 81O). The protection picks up when the frequency reaches its upper or lower limit. Underfrequency and overfrequency protections operate according to a definite time characteristic. One adjustable time-delay is associated to each protection. The time-delay starts as soon as the protection picks up. Each protection generates the start, operate and trip events as described page C-4. When the underfrequency protection is set in trip action, the voltage measurement must be performed on the power source side to allow the circuit breaker closing. As standard, the MicroLogic X voltage input is directly connected to the internal pickup voltage on the bottom side of the circuit breaker.
Details of required power connections:
- if the circuit breaker is bottom-fed, the internal pickup voltage is suitable for underfrequency protection and circuit breaker closing.
- if the circuit breaker is top-fed, an external voltage input is required. The PTE option must be selected to perform the voltage measurement on the power source side.

The protection trips if all below conditions are met:
- the value of frequency exceeds the setting
- the associated timer is elapsed.

Benefits

Underfrequency and overfrequency protections are suitable for generator use. The continuous monitoring of frequency enables appropriate action to be initiated to safeguard the operation of the installation during abnormal or critical situations, for example: load shedding, source change-over, and emergency generator starting.

MicroLogic 2.0 X - 5.0 X - 6.0 X - 7.0 X

DB432619.eps

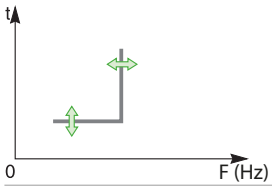

Underfrequency	ANSI 81U	
Frequency (Fmin)	Accuracy: ±0.5 %	40 to 65 Hz by step of 0.1 Hz
Time setting (tFmin)	Max breaking time: 140 ms (with time delay set to 0) accuracy: ±2 %	0 to 300 s, by step of 0.01s

MicroLogic 2.0 X - 5.0 X - 6.0 X - 7.0 X

DB432620.eps

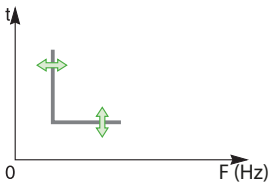

Overfrenquency	ANSI 81O	
Frequency (Fmax)	Accuracy: ±0.5 %	40 to 70 Hz by step of 0.1 Hz
Time setting (tFmax)	Max breaking time: 140 ms (with time delay set to 0) accuracy: ±2 %	0 to 300 s, by step of 0.01s

ANSI 32P - Reverse active power protection

In case of loss of its prime mover (steam turbine, gas turbine or diesel engine), a synchronous power generator connected to an external network or operating in parallel with other generators becomes a synchronous motor and drives the prime mover with a potential risk of mechanical damage. The ANSI 32P - Reverse active power protection is used to detect such abnormal operating conditions and to disconnect the generator from other power sources. This digital module can also be used to monitor the amount of active power exchanged between two parts of an electrical network, with associated alarms, load shedding or tripping as soon as the flow of active power in the selected direction exceeds the set value.

Description

The ANSI 32P - Reverse active power protection digital module is used to generate either an alarm or a trip. This digital module calculates the active power with the RMS values of the voltages and currents. A timer is associated with the protection.
The positive sign of the active power is defined by setting. The same sign is used for active power measurement. By default the MicroLogic X assigns the sign + to the active power when the transit of the active power circulates from the top to the bottom of the circuit breaker. This assumes that the power supply feeding the installation is connected to the top of the circuit breaker (top- fed breaker).
The sign – is assigned when the transit circulates from the bottom to the top of the circuit breaker. When the power supply is connected to the bottom of the circuit breaker (bottom- fed breaker) the sign assigned by default (power sign parameter) can be changed with MicroLogic HMI, EcoStruxure Power Commission software or Modbus command;

The protection trips if all below conditions are met:
- the active power is negative
- the value of active power exceeds the setting
- the timer is elapsed

The recommended settings are 2 % to 6 % of the rated power for turbines and 8 % to 15 % for diesel engines

Benefits

Monitoring of the mode of operation of a synchronous power generator connected to an external network or running in parallel with other generators.
Tripping as soon as the generator operates as a synchronous motor, driving its prime mover.
Monitoring of the active power exchanged between separate parts of an electrical network.

PB119222_L63.eps

C

MicroLogic 2.0 X - 5.0 X - 6.0 X - 7.0 X

DB430645.eps

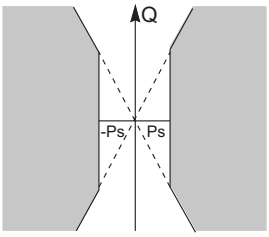

Reverse active power	ANSI 32P	
Active power (Rp)	Accuracy: ±10 %	50kW to 5000 kW by step of 10 kW
Time setting (tRp)	Max breaking time: 140 ms (with time delay set to 0) accuracy: ±2 %	0 to 300 s, by step of 0.05 s

ANSI 51N/51G - Ground-fault alarm

A phase- to- earth fault can be the result of the slow degradation of an insulating component of electrical equipment or the presence of a foreign body inside the equipment. For such events the fault resistance can be significantly high-enough to maintain the earth fault current below the settings of the phase- to- earth fault protections. No tripping occurs and, the installation remains energized with a potential risk of local over-heating and damage. The ANSI 51N/51G - Ground-fault alarm digital module with appropriate settings can pick up such critical resistive earth- fault, allowing the maintenance staff to take appropriate action to restore good operating conditions in the installation .

PB119221_63.eps

Description

The ANSI 51N/51G - Ground-fault alarm digital module is used to generate alarm only. The earth fault alarm and earth-leakage alarm functions operate as the earth fault and earth-leakage protections, using the same sensors. They are, however, independent from these protections and have their own settings.
When the Ground-fault alarm digital module is installed in MicroLogic 2.0 X, MicroLogic 5.0 X or MicroLogic 6.0 X control units, the earth fault alarm is automatically activated. When installed in the MicroLogic 7.0 X control unit, the earth-leakage alarm is automatically activated.
The earth fault current is detected in two ways:

- by summation of either the three phase currents or the three phase currents and the neutral;
- by means of the external sensor SGR installed on the link connecting to the earth the neutral point of the power transformer feeding the installation. The SGR sensor must be connected to the MicroLogic X control unit through the MDGF interface module.

The earth-leakage current is detected by means of the rectangular sensor encompassing the three phases or the three phases and the neutral.

Benefits

Early detection of resistive earth-faults with fault currents increasing slowly up to the settings of the phase-to-earth fault protections.
The alarms allow the maintenance staff to take appropriate action at the right time in order to safeguard the installation.

MicroLogic 2.0 X - 5.0 X - 6.0 X

	Earth fault alarm	**ANSI 51N**	
	Pick up (Ig alarm)	Accuracy: ±10 %	Ig = 0.2 In to In by step of 1A
	Time setting (tg alarm)		1 to 10 s by step of 0.1 s

MicroLogic 7.0 X

	Earth leakage alarm	**ANSI 51G**	
	Sensitivity (IΔn alarm)	Accuracy: Complies with IEC/EN 60947-2 Annex B	IΔn = 0.5 to 22 A by step of 0.1 A
	Time setting (Δt alarm)		1 to 10 s by step of 0.1 s

ERMS - Energy Reduction Maintenance Settings

Under specific circumstances, qualified professionals may need to access and work near energized equipment to perform testing, troubleshooting, and diagnostics. They are thereby subject to the risk of internal arc fault which is a growing concern. Current research shows that up to 80% of reported electrical injuries are caused by an electrical arc. In this context, the safety of personnel working on electrical power distribution systems has received increasing attention from a number of regulatory organizations in recent years [1].

MasterPact MTZ circuit breakers with the “Energy Reduction Maintenance Settings” digital module provide an answer to this issue. The ERMS function, when engaged , allows the MicroLogic X control unit to operate faster.

Should an internal arc fault occur downstream to MasterPact MTZ , the reduced fault clearing time allows a decrease in the amount of energy generated by the electrical arc, and may limit the risk of injury.

Description

The ERMS function is used to reduce the LSIG protection settings in order to trip faster when an internal arc fault occurs. It is acknowledged as one of the recognized solutions to improve the protection of workers against internal arc-fault caused by faulty electrical equipment, abnormal environmental conditions, lack of maintenance, ingress of mice. It complies with the recommendations issued by the regulatory organisations [1] dealing with this concern.

As soon as the ERMS digital module is installed on MicroLogic X control unit, the ERMS function is enabled, but not engaged. Additional steps are then required to set the appropriate ERMS LSIG settings and to engage the ERMS function.

ERMS settings is an additional LSIG tripping curve in addition to dual settings.

ERMS LSIG settings can be customized on site by means of a smartphone via Bluetooth, or with EcoStruxure Power Commission software running on a PC.

Customization of ERMS settings with EcoStruxure Power Commission software or a smartphone is password-protected.

As soon as ERMS is engaged, the ERMS LSIG factory settings are automatically replaced by the ERMS LSIG customized settings:

ERMS can be engaged/disengaged through the Ecostruxure Power Device App app (there is a digital lock between Ecostruxure Power Device App app and MicroLogic X control unit). ERMS can also be engaged/ disengaged through an external lockable selector switch with the additional dedicated ESM hardware module (ERMS Switch Module) [3].

When ERMS is engaged, the corresponding information is made available as follows:

- on the MicroLogic X front face with the ERMS blue LED
- on the MicroLogic X embedded display with the blue backlight
- on an external light with the additional dedicated ESM hardware module
- on a PC with EcoStruxure Power Commission software
- through the customer communications network (Ethernet or Modbus SL)

Benefits

The ERMS function complies with the regulations concerning the protection of personnel against the effects of internal arc fault, when under specified condition it becomes necessary to work close to, or in the vicinity of, energized electrical equipment.

ERMS engaged status is visible at a distance thanks to the MicroLogic X HMI blue backlight. ERMS can be engaged/disengaged with your personnal smartphone.

[1]
- NEC Section 240.87 – Acceptable Methods for Arc Energy Reduction
- NFPA 70E: National Fire Protection Association. Standard for Electrical Safety in the Workplace where there are recognized hazardeous situations when working on energized electrical equipment.
- IEEE 1584: Guide for Performing Arc-Flash Hazard Calculations provides guidelines for conducting a formal arc flash study
- EN 50 110-1: Operation of electrical installations - General requirements

[2] ERMS LSIG factory settings.

[3] When the ESM hardware module is used, the M2C programmable contacts cannot be installed.

DB430646.ai

ERMS settings	Range	Factory settings [2]
Ir ERMS	Same as L protection	In
tr ERMS	Same as L protection	0.5
Isd ERMS	Same as S protection	1.5 ir
tsd ERMS	Same as S protection	0
Ii ERMS	Same as I protection	2
Ii ERMS tripping mode	Same as I protection	fast
Ig ERMS	Same as G protection	0.2
tg ERMS	Same as G protection	0

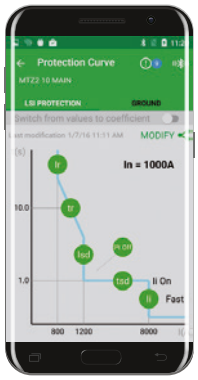

DB421316.ai

Energy per phase

The energy per phase digital module enables the analysis of energy consumption per phase. It is especially recommended for low voltage installations having a large amount of unbalanced loads.

Description

At the point of measurement, this function allows to calculate and to display the imported and exported energy on each phase of the network. It calculates and displays active, reactive and apparent energy per phase. It also provides the total active, reactive and apparent energy (as standard).

Benefits

Follows energy per phase when having large amount of unbalanced loads in low voltage installations, or when different usages or tenants are supplied on each phase.

Note: Energy per phase digital module can be installed on 4 poles MasterPact MTZ circuit breaker or 3 poles circuit breaker as well with the neutral connected to the VN terminal of MicroLogic X and ENVT=Y configuration.

DB421339.ai

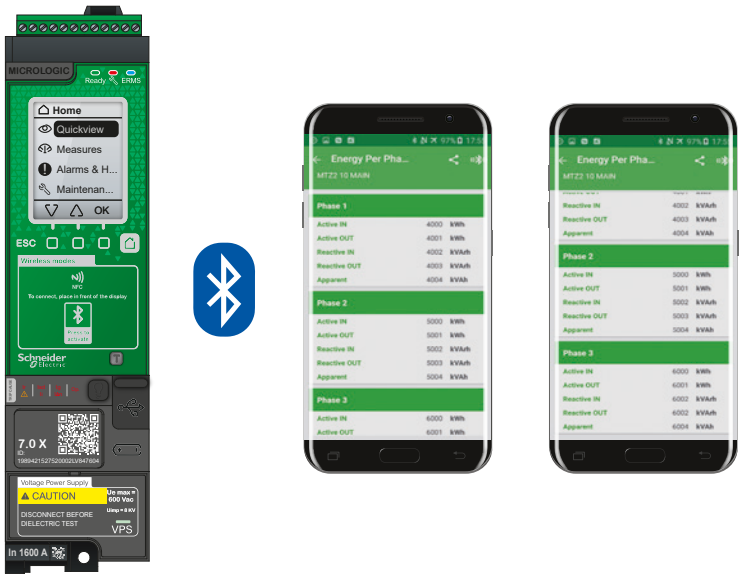

Type of measurement	Symbol	Accuracy	Range min acc	Range max acc	Unit	EHMI	FDM128	EcoStruxure Power Commission Smartphone EIFE IFE, IFM
Active energy IN per phase	Ep IN, phase 1, 2, 3	± 1%	0	10,000,000	kWh	⊗	⊗	◉
Active energy OUT per phase	Ep OUT, phase 1, 2, 3	± 1%	0	10,000,000	kWh	⊗	⊗	◉
Total active energy per phase [1]	Ep phase 1, 2, 3	± 1%	0	10,000,000	kWh	⊗	⊗	◉
Reactive energy IN per phase	Eq IN, phase 1, 2, 3	± 2%	0	10,000,000	kVARh	⊗	⊗	◉
Reactive energy OUT per phase	Eq OUT, phase 1, 2, 3	± 2%	0	10,000,000	kVARh	⊗	⊗	◉
Total reactive energy per phase [1]	Eq phase 1, 2, 3	± 1%	0	10,000,000	kVARh	⊗	⊗	◉
Total apparent energy per phase	Es phase 1, 2, 3	± 1%	0	10,000,000	kVAh	⊗	⊗	◉

[1] IN+OUT or IN-OUT according to setting.

◉ Available
⊗ Not available

Individual harmonics analysis

Harmonic pollution in electrical systems is generated by non-linear loads, for example, power electronic equipment (drives, motor starters, rectifiers, UPS), computers and data processing equipment, arc furnaces, welding machines, lighting (discharge lamps, fluorescent lamps). The harmonics have instantaneous and long-term effects.
The instantaneous effects include for example :
- Disturbance of the operation of power electronic equipment,
- Generation of pulsating mechanical torques, vibrations and noise in asynchronous motors,
- Additional errors in metering devices,
- Interference on communication and control circuits.

The long-term effects include mainly:
- Additional losses and heating in power transformers, rotating machines, capacitors and power cables,
- Mechanical fatigue and premature aging of motors.

The effects of harmonics always have an economic impact resulting from the additional costs linked to:
- Degradation of the performance of electrical installations
- Degradation in the energy efficiency due to increased losses
- Premature aging and oversizing of the electrical equipment.

The limit values below are taken into account by EMC standard IEC 61000-2-4:
THDV < 5% Insignificant deformation of the voltage waveform: No significant risk of malfunction.
5% < THDV < 8% Significant deformation of the voltage waveform: Risk of over-heating and malfunction.
THDV > 8% Major deformation of the voltage waveform: Very high risk of malfunction if the installation has not been specifically calculated and sized with this restriction in mind.
The Individual harmonics analysis digital module allows real-time monitoring of harmonics affecting the voltages and currents of an electrical power system. If harmonic pollution reaches unacceptable limits it helps you to select appropriate corrective solutions.

C

Description

THDV and THDI are available as standard. Individual harmonics of voltages and currents up to rank 40 are available with the Individual harmonics analysis digital module. They are calculated by the MicroLogic X control unit according to the measurements methods specified in IEC 61000-4-30 (Testing and measurement techniques - Power quality measurement methods). The calculation of individual harmonics is performed every 200 ms. MicroLogic X control units provide the average aggregated values of individual harmonics calculated on a time period of 3 s.

Benefits

"Individual harmonics analysis at a glance" on your smart phone.
Easy share with a remote expert thanks to the share function on the smartphone.
Remote individual harmonics analysis thanks to EcoStruxure Power Services.
Real-time monitoring of harmonic pollution enabling appropriate decisions to be made when unacceptable levels are reached:
- Deep investigation, based on measurements and recordings
- Dedicated studies
- Installation of passive filters
- Installation of active filters.

Type of measurement	Symbol	Accuracy	Range min acc	Range max acc	Unit	EHMI IFM EcoStruxure Power Commission	FDM128	Smartphone EIFE IFE
Harmonics of currents up to rank 40	I1, I2, I3, IN	Cl II [2]	40 [1]	4000 x 1.2 [1]	A	⊗	⊗	◉
Harmonics of phase to phase voltage up to rank 40	V12, V23, V31	Cl II [2]	208	690 x 1.2	V	⊗	⊗	◉
Harmonics of phase to neutral voltage up to rank 40	V1N, V2N, V3N	Cl II [2]	120	400 x 1.2	V	⊗	⊗	◉

[1] 40 to 1600 A x1.2 for MTZ1, 40 to 4000 A x1.2 for MTZ2, 80 to 6300 A x1.2 for MTZ3.
[2] According IEC/EN 61000-4-7.

◉ Available
⊗ Not available

Power restoration assistant

Embedded intelligence in LV circuit breakers may help the user to recover the supply in a quick manner.
The optional digital modules dedicated to power restoration and MasterPact operation bring assistance to operators for fault analysis and reduction of the consequences of power outages.

The true cost of a power disruption

Can you afford it ?

Hospital

100000 euros per hour
+ endangered lives

Data centers

750000 euros per minute

Semi conductor manufacturing plant

35 million euros per hour

Description

The function aims to assist maintenance operator on power restoration procedure, by displaying information on the event and the circuit breaker. It helps the operator to determine potential cause of event like opening, manual trip or electrical trip, or loss of supply. It also provides guidance for potential solution to restore the power.

Benefits

This function aims to reduce downtime of power supply at critical load (Mean Time To Repair) after a trip, an opening, or a loss of upstream power supply.

DB421885.ai

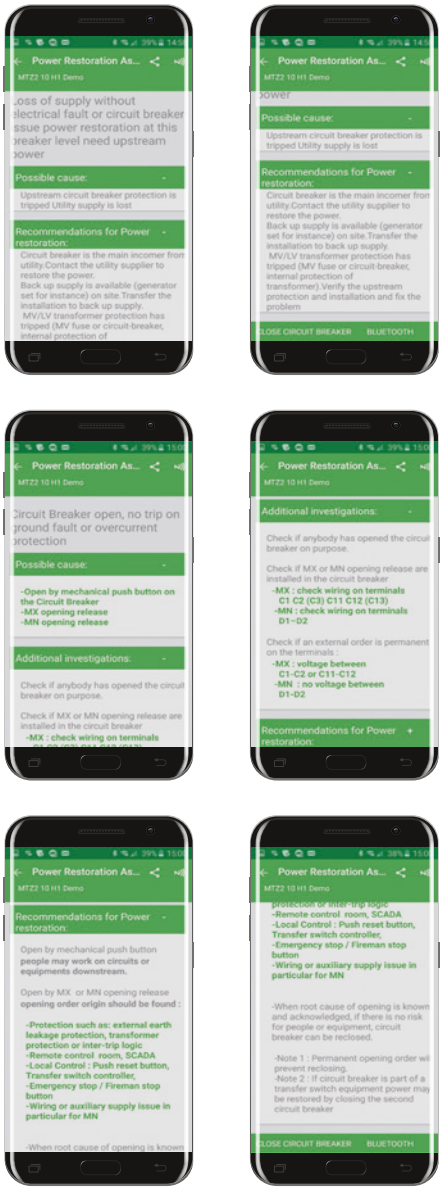

Customize your control unit with digital modules

MasterPact operation assistant

In many critical installations the cost of a power interruption may exceed several hundred thousand euros per hour. Human lives may also be endangered. Most of the time the quick restoration of power is essential after tripping.

Description

This function aims to assist the operator in reclosing and opening the circuit breaker by delivering instructions like reset (if applicable) or charge spring (if applicable).
It displays circuit breaker status like ready to close, voltage release status or spring status. This is a real onsite guidance. Full benefit of the function is given when installed with the diagnostic and communicating voltage release (MX diag&com, XF diag&com).

Benefits

This function allows to close and open the circuit breaker from a distance of few meters.
It reduces reclosing time, without the need for documentation and lengthy training.

DB421340.ai

Yesterday, with MasterPact NT/NW

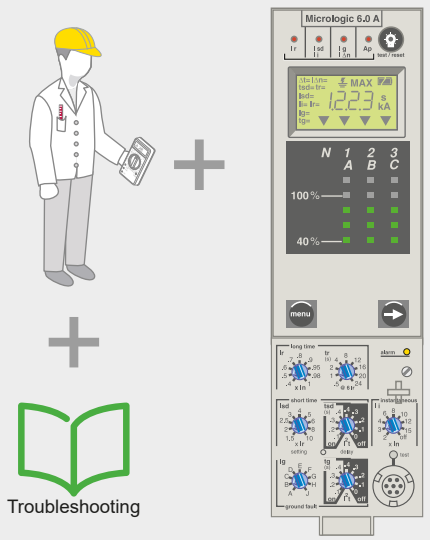

Today, with MasterPact MTZ1, MTZ2 and MTZ3

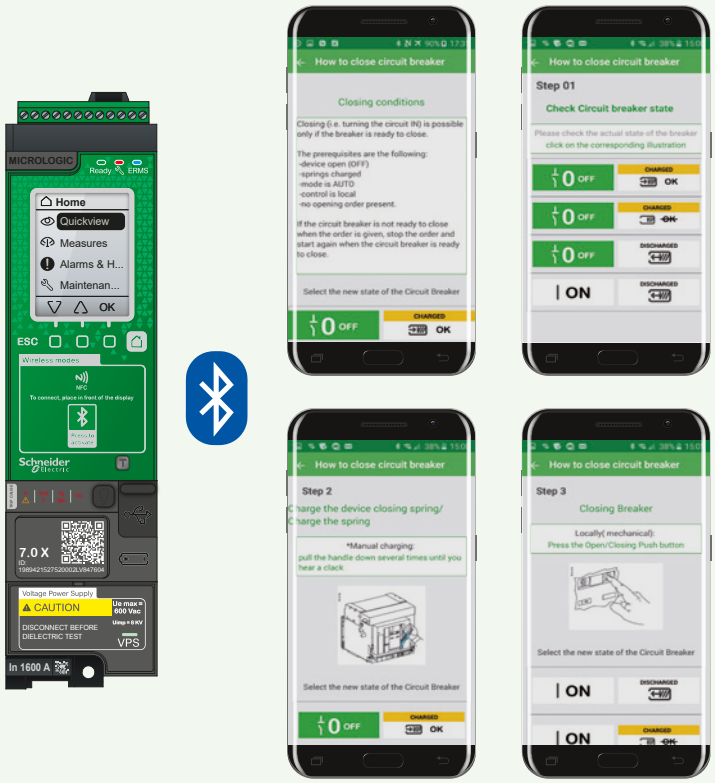

Waveform capture on trip event

After any tripping initiated by long-time, short time, instantaneous, earth fault protection (LSIG) and optional protection the waveform digital module allows to display the interrupted phase and neutral currents.

Description

The Waveform capture on trip event Digital Module provides both short waveform capture and long waveform capture.
The short waveform capture function records five cycles of phase currents and neutral currents (four cycles before and one after the trip event) with a sampling period of 512 µs.The short waveform capture function records the digital status of the following:

- TRIP event: activation of the circuit breaker tripping voltage release (MITOP)
- SDE: fault-trip indication contact
- OPEN: open position of circuit breaker
- ZSI-out and ZSI-in: ZSI signals

The long waveform capture function records 50 cycles of phase currents, neutral currents, phase-to neutral voltage and the frequency (35 cycles before and 15 after the trip event) with a sampling period of 625 µs. The long waveform capture function records the digital status of the OPERATE event when the associated time delay elapses.
The waveform capture is a COMTRADE (Common Format for Transient Data Exchange) file. Refer to the IEEE C37.111 or IEC 60255-24 standard for more information on the COMTRADE file format.

Benefits

The automatic recording of waveform helps the maintenance operator to analyze the trip event in detail. At a glance, it helps to understand the nature of the trip event, the gravity of the trip event (with amplitude and duration) and the potential damage on the installation. Digital signals, like SDE / Open / ZSI, support analysis of global behavior of the circuit breaker in the power system (response time, selectivity).

DB421341.ai

Yesterday, with MasterPact NT/NW

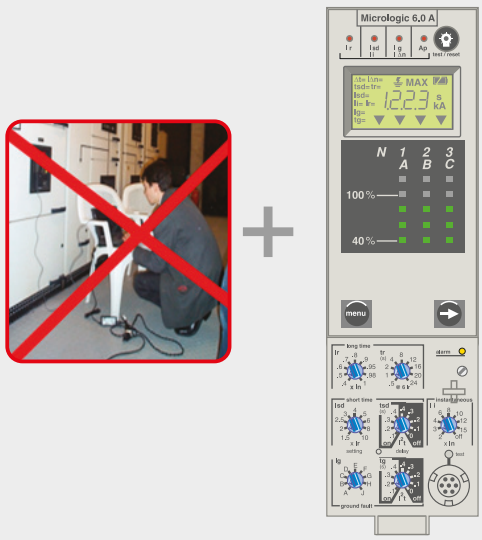

Today, with MasterPact MTZ1, MTZ2 and MTZ3

Modbus legacy dataset

Supervision software for MasterPact NT/NW circuit breakers uses Modbus drivers that are compatible with legacy format Modbus registers. MasterPact MTZ circuit breakers provide standard format Modbus registers.
As a result, supervision software for MasterPact MTZ should use Modbus drivers that are compatible with standard format Modbus registers. The Modbus legacy dataset Digital Module provides a dataset that is compliant with the legacy format. This dataset can be used by existing Modbus drivers running supervision software designed for MasterPact NT/NW to allow easy integration for installations which include both MasterPact NT/NW and MasterPact MTZ circuit breakers.

Description

The Modbus dataset collects the most useful information for remote supervision software in one convenient Modbus table (starting at register 12000 for the legacy dataset, starting at register 32000 for the standard dataset). This table contains the following information:

- Circuit breaker status
- Tripping causes
- Real time values (current, voltage, power, energy…)

The user can get the information contained in this table with only two read requests.
As standard, with MicroLogic X control units, the Modbus standard dataset is available via the following communication interfaces: EIFE, IFE, IFE gateway and IFM.
As an option, with Modbus legacy dataset Digital Module, the Modbus legacy dataset is available via the following communication interfaces: EIFE, IFE, IFE gateway and IFM.
The Modbus legacy dataset is compatible with the MicroLogic control unit of MasterPact NT/NW.

Benefits

The Modbus legacy dataset Digital Module allows the system integrator to keep the same existing Modbus driver within the supervision software.
It allows easy integration for installations with both MasterPact NT/NW and MasterPact MTZ.

C

Customize your circuit breaker with accessories

Overview of accessories.....D-2

Design and installation simplification
Connection..... D-4

Operation efficiency
Signalling..... D-8
Controlling..... D-13

Protection of people and property
Locking and interlocking..... D-22
Circuit protection..... D-26
Operation and mechanical protection..... D-29

Power Availability and reliability
Power supplies..... D-32

D

Other chapters

Select your circuit breakers and switch-disconnectors..... A-1
Select your MicroLogic X control unit..... B-1
Customize your MicroLogic X with digital modules..... C-1
Integrate in Smart panels - Architecture and systems E-1
Integrate in switchboard F-1
Integrate in special applications - Source-changeover systems.....G-1
Services.....H-1
Order your circuit breaker..... I-1

Overview of accessories

Drawout version ◉

Fixed version ◉

D

Design and installation simplification - connection	Applicable for	Fixed	Drawout	> On page D-4
Horizontal and vertical rear connection	MTZ 1/2/3	◉	◉	
Front connection	MTZ 1/2/3	◉	◉	
Vertical-connection adapters	MTZ 1	◉	◉	
Cable-lug adapters	MTZ 1	◉	◉	
Spreaders	MTZ 1	◉	◉	
Disconnectable front connection adapter	MTZ 2/3	◉	○	
Interphase barriers	MTZ 1/2/3	◉	◉	
CC - arc chute cover	MTZ 1	◉	○	
Brackets for mounting	MTZ 2/3	◉	○	
Operation efficiency - Signalling				**> On page D-8**
OF - ON/OFF indication contacts	MTZ 1/2/3	◉	◉	
SDE - fault-trip indication contact	MTZ 1/2/3	◉	◉	
EF - combined connected/closed contacts	MTZ 2/3	○	◉	
CE, CD, CT - Carriage switches	MTZ 1/2/3	○	◉	
PF - ready-to-close contact	MTZ 1/2/3	◉	◉	
M2C - Programmable contacts	MTZ 1/2/3	◉	◉	
ESM - ERMS switch module	MTZ 1/2/3	◉	◉	
CDM - mechanical operation counter MTZ1/2/3	MTZ 1/2/3	◉	◉	
Operation efficiency - Controlling				**> On page D-13**
XF - closing voltage release	MTZ 1/2/3	◉	◉	
XF diag&com - diagnostic and communicating closing voltage release	MTZ 1/2/3	◉	◉	
MX - opening voltage release	MTZ 1/2/3	◉	◉	
MX diag&com - diagnostic and communicating opening voltage release	MTZ 1/2/3	◉	◉	
MN - undervoltage release	MTZ 1/2/3	◉	◉	
MN diag - diagnostic undervoltage release	MTZ 1/2/3	◉	◉	
R - non-adjustable delay unit	MTZ 1/2/3	◉	◉	
Rr - adjustable delay unit	MTZ 1/2/3	◉	◉	
Isolation module	MTZ 1/2/3	◉	◉	
MCH - gear motor	MTZ 1/2/3	◉	◉	
RES - electrical reset option	MTZ 1/2/3	◉	◉	
RAR - automatic reset option	MTZ 1/2/3	◉	◉	
BPFE - electrical closing pushbutton	MTZ 1/2/3	◉	◉	
People and property safety - Locking and Interlocking				**> On page D-22**
VBP - ON/OFF pushbutton locking	MTZ 1/2/3	◉	◉	
VSPO-VCPO - OFF position locking	MTZ 1/2/3	◉	◉	
Chassis locking in disconnected position by padlock	MTZ 1/2/3	◉	◉	
VSPD - Chassis locking in disconnected position: by keylock	MTZ 1/2/3	○	◉	
Optional connected/disconnected/test position locking	MTZ 1/2/3	○	◉	
VO - Safety shutters (with padlocking standard)	MTZ 1/2/3	○	◉	
VIVC - shutter position indication and locking	MTZ 2/3	○	◉	
IPA - cable-type door interlock	MTZ 1/2/3	◉	◉	
VPEC - door interlock	MTZ 1/2/3	○	◉	
VPOC - racking interlock	MTZ 1/2/3	○	◉	
IBPO - racking interlock between crank and OFF pushbutton	MTZ 2/3	○	◉	
V DC - mismatch protection	MTZ 1/2/3	○	◉	
People and property safety - Circuit protection				**> On page D-26**
TCE - external sensor for neutral and residual earth fault protection	MTZ 1/2/3	◉	◉	
SGR - External sensor for source ground return protection	MTZ 1/2/3	◉	◉	
Rectangular sensor for earth-leakage protection	MTZ 1/2/3	◉	◉	
People and property safety - Operation protection				**> On page D-29**
DAE - automatic spring discharge before breaker removal	MTZ 2/3	○	◉	
KMT - grounding kit	MTZ 2/3	◉	◉	
People and property safety - Mechanical protection				**> On page D-29**
CB - terminal block shield	MTZ 1/2/3	○	◉	
CDP - escutcheon	MTZ 1/2/3	◉	◉	
OP - blanking plate for escutcheon	MTZ 1/2/3	◉	◉	
CP - transparent cover for escutcheon	MTZ 1/2/3	○	◉	
Power availability and realiability - Power supplies				**> On page D-32**
VPS - Voltage power supply	MTZ 1/2/3	◉	◉	
External 24 V DC power supply module (AD)	MTZ 1/2/3	◉	◉	
BAT - battery module	MTZ 1/2/3	◉	◉	
Mobile Power Pack by APC	MTZ 1/2/3	◉	◉	
Spare internal battery	MTZ 1/2/3	◉	◉	

Overview of accessories

Mounting versions
MasterPact circuit breakers are available in two mounting versions: fixed and drawout
The drawout version is prefered in most of the applications due to its following benefits:
- visible separation of the power contacts via racking out
- easy and complete access to the device for periodic maintenance
- possibility of a quick replacement of the device if necessary

MasterPact MTZ Accessories provide the possibility to further customize the circuit breaker and enhance functionality at all stages of the lifecycle.
- The comprehensive range of accessories addresses the needs of majority of applications
- Many accessories are common between MasterPact NT, NW, MTZ1, MTZ2 and MTZ3. In addition, some accessories are also common between MasterPact and ComPact ranges. Safety stock can therefore be optimized and less training is required to master the installation of different ranges of Schneider Electric circuit breakers. The design of the circuit breaker incorporates the need to simplify installation, last minute changes and future upgrading.

MasterPact MTZ2/3 drawout version as an example

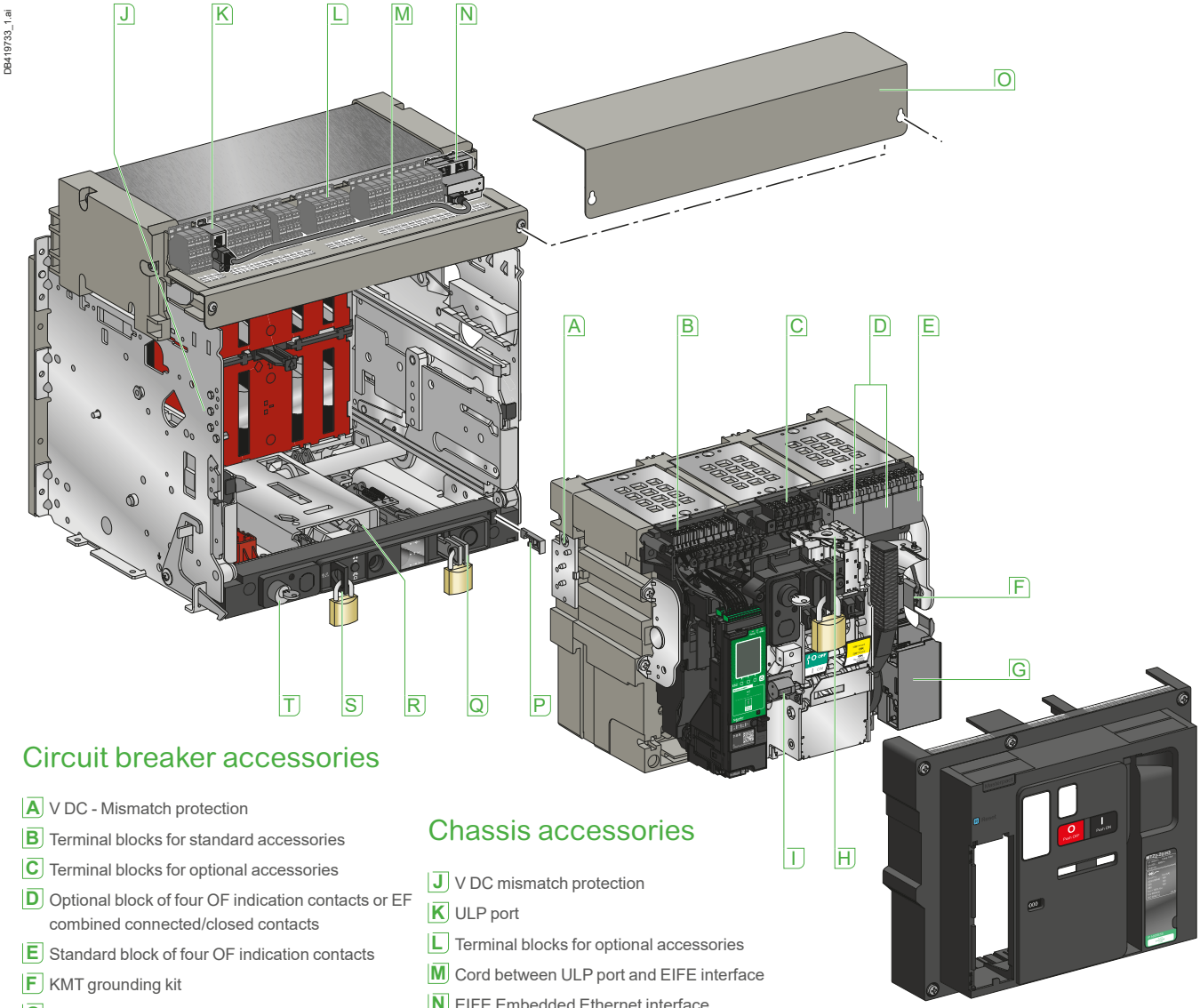

Circuit breaker accessories

- A V DC - Mismatch protection
- B Terminal blocks for standard accessories
- C Terminal blocks for optional accessories
- D Optional block of four OF indication contacts or EF combined connected/closed contacts
- E Standard block of four OF indication contacts
- F KMT grounding kit
- G MCH gear motor
- H MX, XF, MN, MX diag&com, MN diag&com and MN diag voltage release
- I CDM operation counter

Chassis accessories

- J V DC mismatch protection
- K ULP port
- L Terminal blocks for optional accessories
- M Cord between ULP port and EIFE interface
- N EIFE Embedded Ethernet interface
- O CB - Terminal block shield
- P VPOC racking interlock
- Q VIVC Shutter position indication locking
- R Latch to lock the device in any position
- S Chassis locking in disconnected position by padlock
- T VSPD - Chassis locking in disconnected position by keylock

Design and installation simplification

Connection

Simple and adaptable design, accurate and fast installation are the first two essential elements of building a switchboard. MasterPact MTZ provides three types of basic connections and additional accessories to fullfill different connection needs as well as to simplify installation.

MasterPact MTZ1 fixed version as an example

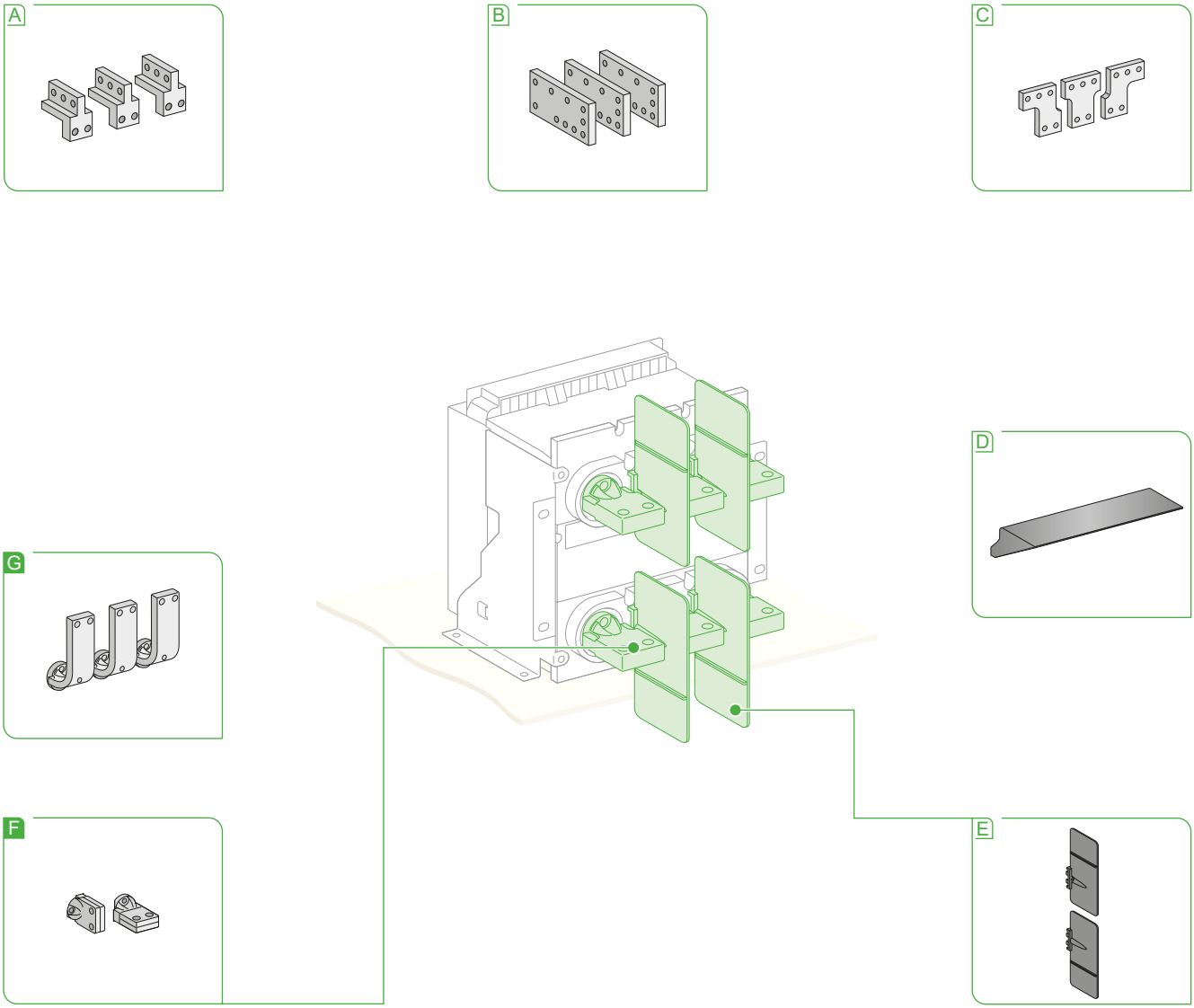

DB419898.ai

Connection accessories

- A Vertical connection adapters
- B Cable-lug adapters
- C Spreaders
- D Arc chute screen
- E Interphase barriers

Connection

- F Horizontal and vertical rear connection
- G Front connection

Note: For more information, see Chapter I.

Design and installation simplification

Connection

Three types of basic connections are available for MasterPact MTZ1, MTZ2 and MTZ3 devices:
- Rear vertical connection
- Rear horizontal connection
- Front connection

Top and bottom can have different connection types (mixed connection).
Changing between horizontal and vertical rear connection can be done by simply turning the terminal by 90°.
MasterPact circuit breakers can be connected indifferently with bare-copper, tinned-copper or tinned aluminum conductors. No special treatment is required.

MasterPact MTZ2/3 fixed version as an example

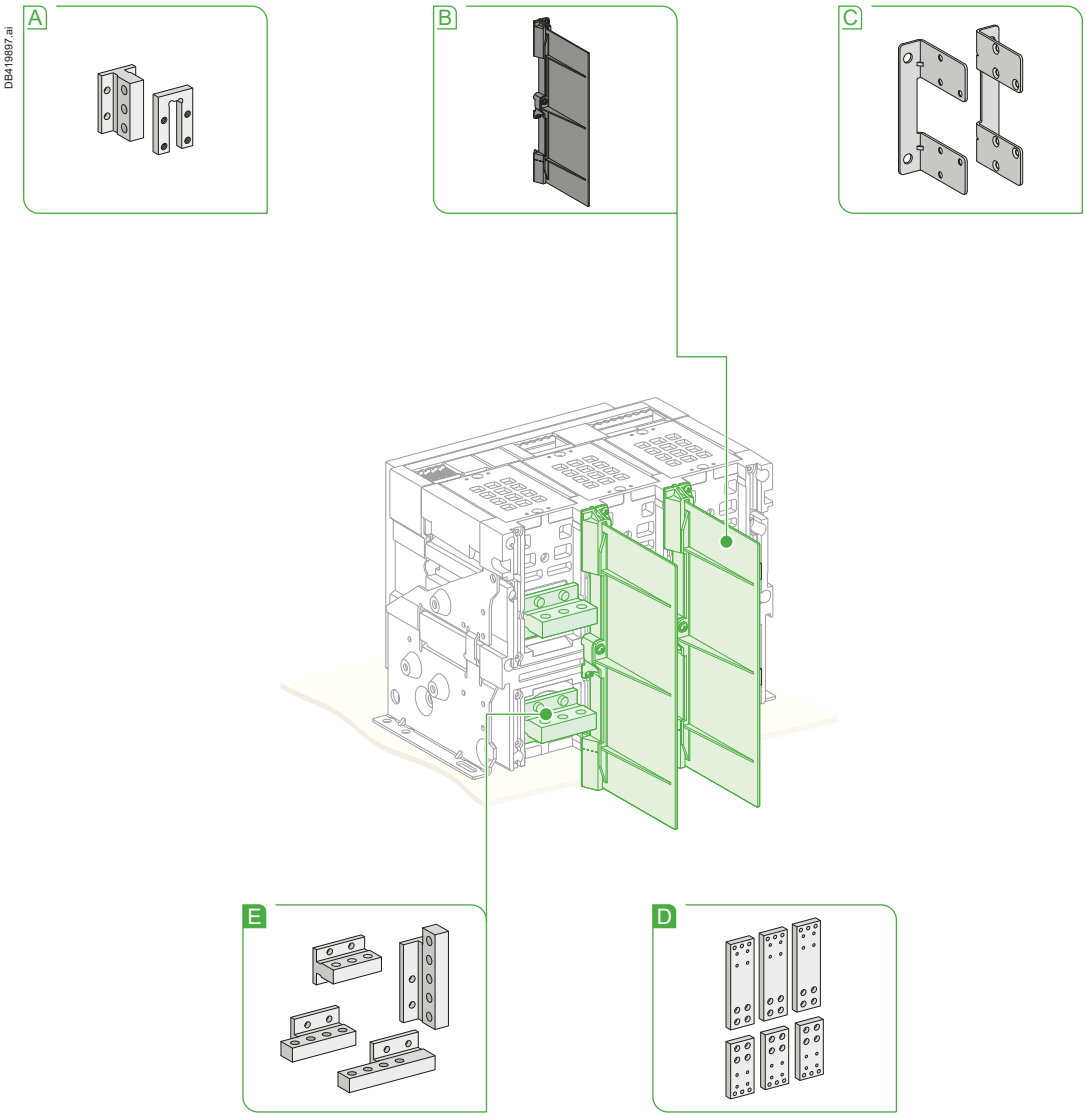

Connection accessories

A Disconnectable front connection adapter

B Interphase barriers

C Mounting brackets

Connection

D Front connection

E Horizontal and vertical rear connection

Note: For more information, see Chapter I.

Design and installation simplification
Connection

Three types of connections are available

Rear connection

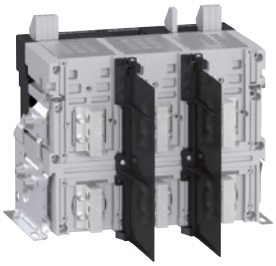

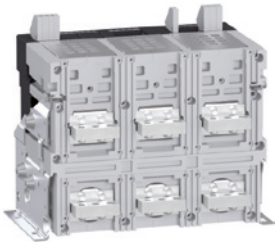

For 6300 A circuit breaker only vertical connection is available.

Front connection

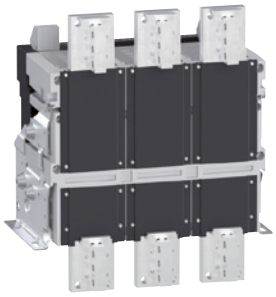

Front connection is available for fixed and drawout versions up to 3200 A.

D

	MasterPact MTZ1				MasterPact MTZ2, MTZ3				Type of accessories
	Fixed front	Fixed rear	Drawout front	Drawout rear	Fixed front	Fixed rear	Drawout front	Drawout rear	
	● [1]	○	● [1]	○	○	○	○	○	**Vertical connection adapters** Vertical connection adapters are used for simplifying the connection to a set of vertical busbars. They are mounted on front-connected MTZ1 devices or chassis. The adapters can be oriented either towards the front or the back of the device. When oriented towards the front of the fixed devices, the use of arc chute screen is compulsory.
	● [1]	○	● [1]	○	○	○	○	○	**Cable lug adapters** Cable lug adapters are used for simplifying the connection of cables fitted with lugs. They are mounted on the vertical-connection adapters on front connected devices or chassis. To ensure adequate mechanical strength, the cable lug adapters must be secured together via spacer (part number 04691). The cable lug adapters must not go over the arc chute screen (see “Dimensions” page in this catalog).
	● [1] [2]	● [1] [2]	● [1] [2]	● [1] [2]	○	○	○	○	**Spreaders** When the connection bar is wider than the terminal, or a higher pole pitch is needed, spreaders can be mounted on the front or rear terminals of MTZ1 devices.
	○	○	○	○	●	○	○	○	**Disconnectable front connection adapter** Disconnecting a rear connected circuit breaker for maintenance or replacement can be complicated if there is no rear access to the switchboard. To avoid this complication, front connectors and disconnectable adapters can be used together as shown in the picture. In this case, the circuit breaker can be easily disconnected from the front of the switchboard.

[1] Spreaders, vertical connection adapters and cable lug adapters cannot be used when the voltage is ⩾ 500 V.
[2] MTZ1 spreaders are not compatible with interface barriers.
[3] Mandatory for voltage ⩾ 500 V. Not compatible with spreaders.
[4] Except for MTZ2 40 equipped with horizontal rear connections and for fixed MTZ3 40-63 .
[5] Mandatory for fixed MTZ1 front connexion versions with vertical connection adapters oriented towards the front.

Design and installation simplification

Connection

Mixed connection

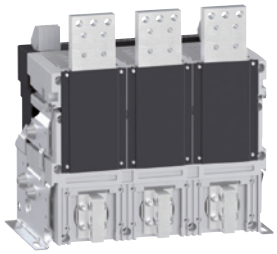

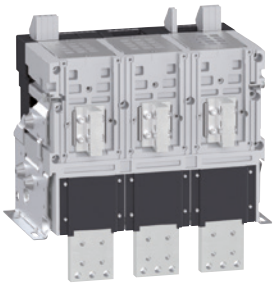

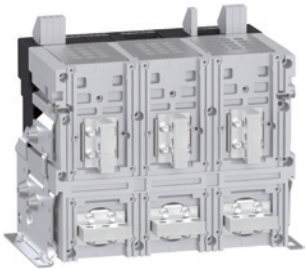

Mixed connection. Top and bottom can have different connection types

Type of accessories	MasterPact MTZ1				MasterPact MTZ2, MTZ3			
	Fixed front	Fixed rear	Drawout front	Drawout rear	Fixed front	Fixed rear	Drawout front	Drawout rear
Interphase barriers To reinforce the isolation of connecting points, interphase barriers can be installed vertically between rear connection terminals. As the interphase barriers are bendable, it gives more flexibility when installing the busbars. The busbars can be insulated or not. **They are mandatory for MTZ1 devices at voltages ⩾ 500 V.** **Interphase barriers are not compatible with:** **■ spreaders on MTZ1** **■ front connections on drawout version MTZ1** **■ front connections on MTZ2** **■ horizontal connections on MTZ2 40** **■ MTZ3 fixed version.**	● [3]	● [3]	○	● [3]	○	● [4]	○	● [4]
Arc chute screen When the breaker trips with high current, hot gas is generated and pushed up to the terminals through the filter. A flashover can occur between different terminals. An arc chute screen blocks the hot air and prevents the generation of an arc between the terminals. For the drawout type, an additional arc chute screen is not necessary as the filter is already covered. For fixed MasterPact MTZ1 with front-connection and vertical-connection adapters oriented towards the front, it is mandatory to respect the safety clearances.	● [5]	●	○	○	○	○	○	○
Mounting brackets When fixing a breaker at the back, mounting brackets can be installed on the backplates to simplify the installation. Only applicable for MTZ2 08 to 32.	○	○	○	○	●	●	○	○

Operation efficiency

Signalling

Efficient day-to-day operation is vital. It means precise, in time and accessible data about the status of the circuit breaker and fast action without the limitation of physical location.
MasterPact further develops the operation efficiency of the circuit breaker through signalling and control accessories.

Signalling
Signalling accessories provide status indications for both the device and the chassis. The accessories listed below are available to achieve efficiency objectives. Combinations of contacts are possible depending on the needs.

- On/Off position of the breaker main poles - OF
- Fault trip of the breaker - SDE
- Combined connected/closed position of the breaker (for MTZ 2/3 only) - EF
- Connected, disconnected and test positions of the chassis – CE, CD, CT
- Threshold overruns or status change through M2C programmable contacts – M2C
- Indication ERMS engaged through ESM, ERMS switch module
- Ready-to-close contact - PF
- Operation counter - CDM

OF, EF, CE, CD, CT, SDE and PF are available:

- in the standard version for relay applications
- in a low-level version for control of PLCs and electronic circuits.

D

DB430622.ai

MasterPact MTZ2 drawout version as an example

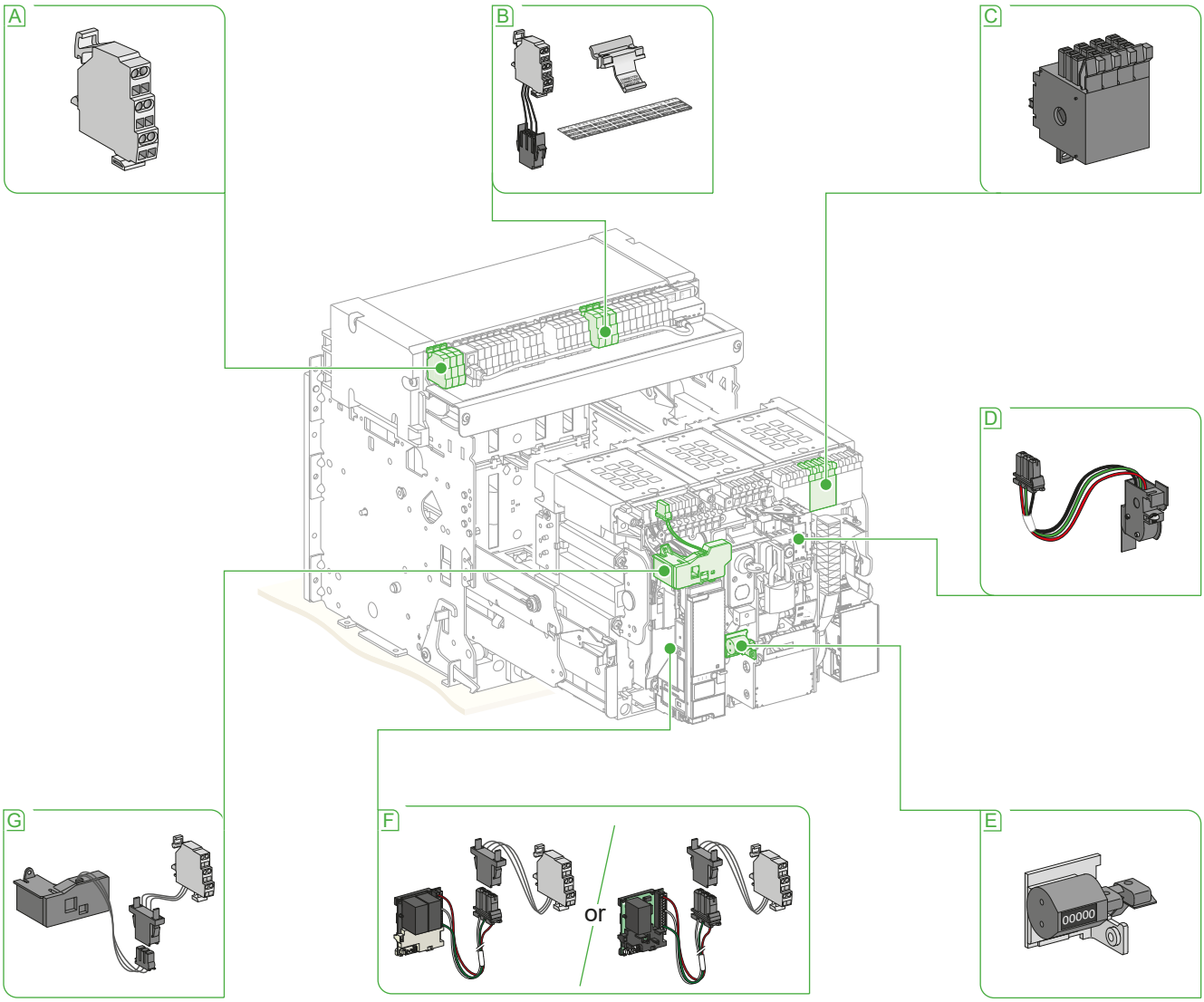

A CE, CD - Carriage switches

B EF - combined connected/closed contacts

C OF - ON/OFF indication contacts

D PF - ready-to-close contact

E CDM - mechanical operation counter

F M2C - Programmable contacts
or ESM - ERMS switch module

G SDE - fault-trip indication contact

Life Is On Schneider Electric

ON/OFF indication contacts OF

Two types of contacts indicate the ON and OFF position of the circuit breaker:
- Micro switch type changeover contacts standard or low level version for MasterPact MTZ1
- Rotary type changeover contacts for MasterPact MTZ2/3. They are driven directly by a mechanism and switch when the minimum isolation distance between the main poles of the circuit breaker is reached.
- Four OF contacts are provided in the basic configuration for all the MasterPact circuit breakers.
- For MTZ1, no additional OF contacts can be added. However, low level OF contacts can replace the standard OF contacts. A mix of low level contacts and standard contacts is possible.
- For MTZ2/3, the rotary type changeover contacts can be used in both standard and low level version. In addition to the 4 OF contacts provided for the basic configuration, two optional blocks of 4 contacts can be added on the circuit breaker. This gives 12 OF contacts maximum. When EIFE is installed, as it takes up two OF positions, the maximum number of OF contacts is reduced to 10.

For MasterPact MTZ2 and MTZ3, two positions of OF are taken up when EIFE is installed.

OF						
			MTZ1		MTZ2/3	
Type			Micro switch standard type	Micro switch low level type	Rotary type contacts by default	Rotary type contacts additionals
Number			By default 4	Maximum 4	By default 4	Maximum 8
Minimum load			100 mA/24 V	2 mA/15 V	2 mA/15 V	2 mA/15 V
Breaking capacity (A) p.f.: 0.3 AC-12/ DC-12 [1]	V AC	240/380	6	5	10	6
		480	6	5	10	6
		690	6	5	6	6
	V DC	24/48	2.5	5/2.5	10	6
		125	0.5	0.5	10	6
		250	0.3	0.3	3	3

Fault-trip indication contacts SDE

Circuit breaker tripping following a fault is signalled by:
- local indication given by a blue mechanical fault indicator (reset)
- remote indication given by a changeover contact SDE

Following tripping, the mechanical indicator must be reset before the circuit breaker can be closed. One SDE standard level (SDE1) is supplied in the basic breaker configuration. An optional SDE (SDE2, standard or low level) can be added.

Note: SDE2 is incompatible with the electrical reset after fault-trip option (RES), see page D-11. Details of RES are explained on page D-21.

SDE				MTZ1, MTZ2, MTZ3
Supplied as standard				1
Maximum number				2
Breaking capacity (A) p.f.: 0.3 AC-12/DC-12 [1]	Standard			Minimum load: 100 mA/24 V
		V AC	240/380	6
			480	2
		V DC	24/48	3
			125	0.3
			250	0.15
	Low-level			Minimum load: 2 mA/15 V
		V AC	24/48	3
			240	3
			380	3
		V DC	24/48	3
			125	0.3
			250	0.15

[1] Utilization category according IEC 60947-5-1.

PB100806-32.eps

ON/OFF indication contacts (OF) (micro switch type) - MTZ1

PB100807-20.eps

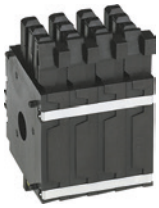

ON/OFF indication contacts (OF) (rotary type) - MTZ2 and MTZ3

PB100820-32.eps

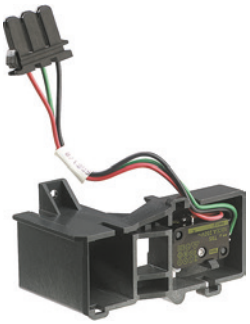

Additional fault-trip indication contacts (SDE)

D

Operation efficiency
Signalling

PB100816-32.eps

Combined contacts.

D

PB100817-32.eps

CE, CD and CT connected/disconnected/test position carriage switches.

Combined connected/closed contacts EF

The contact combines the device connected and the device closed information to produce the circuit closed information. Supplied as an option for MasterPact MTZ2/3, it is installed in the place for the connector of an additional OF contact.

Note: Ordering of additional OF contacts is compulsory if EF is selected.
The maximum number of EF is the number of additional OF contacts.

EF				MTZ2, MTZ3
Maximum number				8
Breaking capacity (A)	Standard			Minimum load: 100 mA/24 V
p.f.: 0.3		V AC	240/380	6
AC-12/DC-12 [1]			480	6
			690	6
		V DC	24/48	2.5
			125	0.8
			250	0.3
	Low-level			Minimum load: 2 mA/15 V
		V AC	24/48	5
			240	5
			380	5
		V DC	24/48	2.5
			125	0.8
			250	0.3

Connected, disconnected and test position carriage switches

As standard, the connected, disconnected and test positions are shown by a mechanically indexed indicator. It shows the exact position when the racking handle blocks.

In addition, three types of optional auxiliary contacts (both standard and low level) are available to indicate the position of the chassis:

- changeover contacts to indicate the connected position CE,
- changeover contacts to indicate the disconnected position CD. This position is indicated when the required clearance for isolation of the power and auxiliary circuits is reached,
- changeover contacts to indicate the test position CT. In this position, the power circuits are disconnected and the auxiliary circuits are connected.

				MTZ1, MTZ2, MTZ3
Contacts				CE/CD/CT
Breaking capacity (A)	Standard			
p.f.: 0.3		V AC	240	8
AC-12/DC-12 [1]			380	8
			480	8
			690	6
		V DC	24/48	2.5
			125	0.8
			250	0.3
	Low-level			
		V AC	24/48	5
			240	5
			380	5
		V DC	24/48	2.5
			125	0.8
			250	0.3

[1] Utilization category according IEC 60947-5-1.

Connected, disconnected and test position carriage switches

MTZ1

1	2	3	4	5	6	7	8	9	10	11	12	13	14	15	16	17	18	19	20	21	22
CE	CE	COM	UC1	UC2	SDE	M2C	UC3	SDE	MX	MX	XF	PF	MCH	OF	OF	OF	OF	CD	CD	CE	CT
					RES	UC4			MN									EIFE			
						ESM															

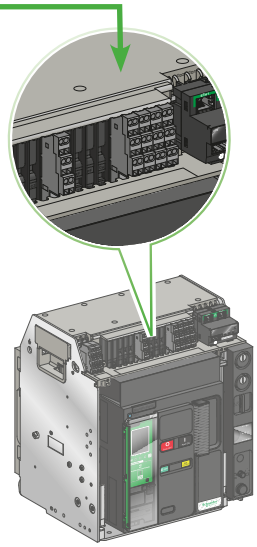

As shown in the picture above, the carriage switches can be installed in 6 positions: 1, 2, 19, 20, 21 and 22. Each position corresponds to a particular type of auxiliary contact (CE, CD, CT).
When EIFE is installed, it takes the place of 1 CD at position 19, 1 CD at position 20, 1 CE at position 21 and 1 CT at position 22. The CD, CE, CT switches are directly connected to EIFE which makes the information available through the Ethernet communication bus.

Position	Without EIFE	With EIFE
1	None or 1 CE	None or 1 CE
2	None or 1 CE	None or 1 CE
19	None or 1 CD	None
20	None or 1 CD	None
21	None or 1 CE	None
22	None or 1 CT	None

Note: Any standard contact can be replaced by a low level contact except for the ones provided by EIFE.

MTZ2 and MTZ3

1	2	3	4	5	6	7	8	9	10	11	12	13	14	15	16	17	18	19	20	21	22	23	24	25	26	27	28	29	30	31	32	33	34
CD	CD	CD	COM	UC1	UC2	SDE	UC4	UC3	M2C	SDE	CE	CE	CE	MN	MX	XF	PF	MCH	OF	OF	OF	OF	OF	OF	OF	OF	OF	OF	OF	OF	CT	CT	CT
CE	CE	CE				RES			ESM		CT	CT	CT	MX					EF	EF	EF	EF	EF	EF	EF	EF					CE	CE	CE
																															CD	CD	CD
																														EIFE			

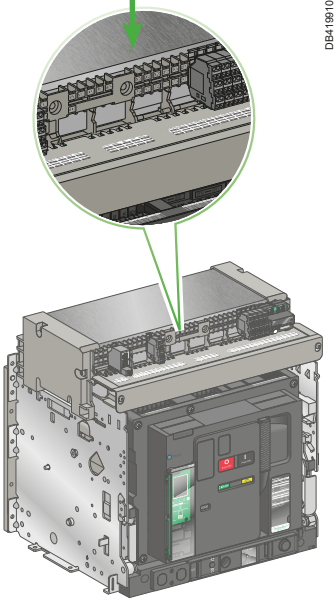

As shown in the picture above, the carriage switches can be installed in three blocks:
- Position 1, 2, 3 for the first block.
- Position 12, 13, 14 for the second block.
- Position 32, 33, 34 for the third block.

As standard, the first block can be installed with CD (maximum 3), the second block can be installed with CE (maximum 3), and the third block can be installed with CT (maximum 3).
Change of the functions of the carriage switches is possible. In this case, the first block can be replaced by CE, the second block can be replaced by CT and the third block can be replaced by CE or CD.
Mixing of CE, CD, CT in one block is not possible. For example, installing 1CD and 2CE in the first block is not possible.
When EIFE is installed, it takes the place of CT, CE and CD switches at positions 32, 33 and 34.
The CD, CE, CT switches are directly connected to EIFE which makes the information available through the Ethernet communication bus. As EIFE also takes up positions 30 and 31, OF cannot be installed at these positions and the maximum number of OF contacts is limited to 10.

Block: Position	Without EIFE	With EIFE
1: 1, 2, 3	None or 1CD or 2CD or 3CD or 1CE or 2CE or 3CE	None or 1CD or 2CD or 3CD or 1CE or 2CE or 3CE
2: 12, 13, 14	None or 1CE or 2CE or 3CE or 1CT or 2CT or 3CT	None or 1CE or 2CE or 3CE or 1CT or 2CT or 3CT
3: 32, 33, 34	None or 1CT or 2CT or 3CT or 1CE or 2CE or 3CE or 1CD or 2CD or 3CD	None

Note: Any standard contact can be replaced by a low level contact except for the ones provided by EIFE.

Operation efficiency
Signalling

PB115794.eps

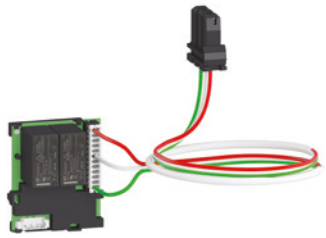

M2C programmable contacts: circuit breaker internal relay with two contacts

D

LV636302.eps

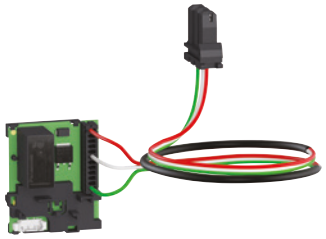

ESM: ERMS switch module

PB100818-16.eps

Ready-to-close contacts PF

PB116027_64.eps

Operation counter CDM

M2C programmable contacts

The M2C optional module (2 contacts) can be used to signal threshold overruns or status changes. The assignment of the 2 contacts can be configured by using EcoStruxure Power Commission software. The M2C optional module (2 contacts) requires the MicroLogic X control unit to be supplied by an external 24 V dc power supply. When the M2C optional module 2 contacts is installed, the ESM hardware module cannot be installed.

M2C	MTZ1, MTZ2, MTZ3	Output
Rated voltage	V AC	250 V / 3 A
	V DC	30 V / 3 A
Max breaking voltage	V AC	277 V / 3 A
Max load breaking capacity	V AC	277 V / 3 A
	V DC	30 V / 3 A
Minimum load	V DC	5 V / 10 mA

ESM: ERMS Switch Module

The ESM optional hardware module is used with an external lockable selector switch to engage/disengage the ERMS function. It is equipped with one input dedicated to the ERMS selector switch and one output to activate an external pilot light when the ERMS is engaged. The ESM optional hardware module requires the MicroLogic X control unit to be supplied by an external 24 V dc power supply. When the ESM optional hardware module is installed, the M2C optional module 2 contacts cannot be installed.

ESM	MTZ1, MTZ2, MTZ3	Output	Input
Rated voltage	V AC	250 V / 3 A	24 ... 110 V
	V DC	30 V / 3 A	24 V
Max breaking voltage	V AC	277 V / 3 A	-
Max load breaking capacity	V AC	277 V / 3 A	-
	V DC	30 V / 3 A	-
Minimum load	V DC	5 V / 10 mA	-

Ready-to-close contact PF

The ready-to-close function ensures that the breaker will close only when all the necessary criteria are met.
It checks through the prerequisites for closing the circuit breaker and informs when it is ready to close.
It consists of a mechanical indicator and a PF changeover contact.
This indicator only shows ready when all the following conditions are met:
- the circuit breaker is in the OFF position
- the spring mechanism is charged
- a maintained opening order is not present.

This indicator will not show ready when any of the following conditions is met:
- voltage release MX energized
- fault trip
- remote tripping second voltage release MX or MN
- device not completely racked in
- device locked in OFF position
- device interlocked with a second device.

Note: Details of MX are presented on page D-18.

PF	MTZ1, MTZ2, MTZ3			
Maximum number	1			
Breaking capacity (A) p.f.: 0.3 AC-12/DC-12 [1]	Standard - Minimum load: 100 mA/24 V			
	V AC	240/380	480	
		5	2	
	V DC	24/48	125	250
		3	0.3	0.15
	Low-level - Minimum load: 2 mA/15 V			
	V AC	24/48	240	
		3	3	
	V DC	24/48	125	
		3	0.3	

[1] Utilization category according IEC 60947-5-1.

Operation counter CDM

The operation counter sums the number of operating cycles and is visible on the front panel. It is compatible with manual and electrical control functions.
This option is compulsory for source-changeover systems.

Operation efficiency
Controlling

Control accessories bring convenience and safety by providing multiple ways of controlling the circuit breaker and the possibility to operate it remotely. Two control devices are presented here:
- Remote On/Off
- Remote reset after fault tripping

DB419896.ai

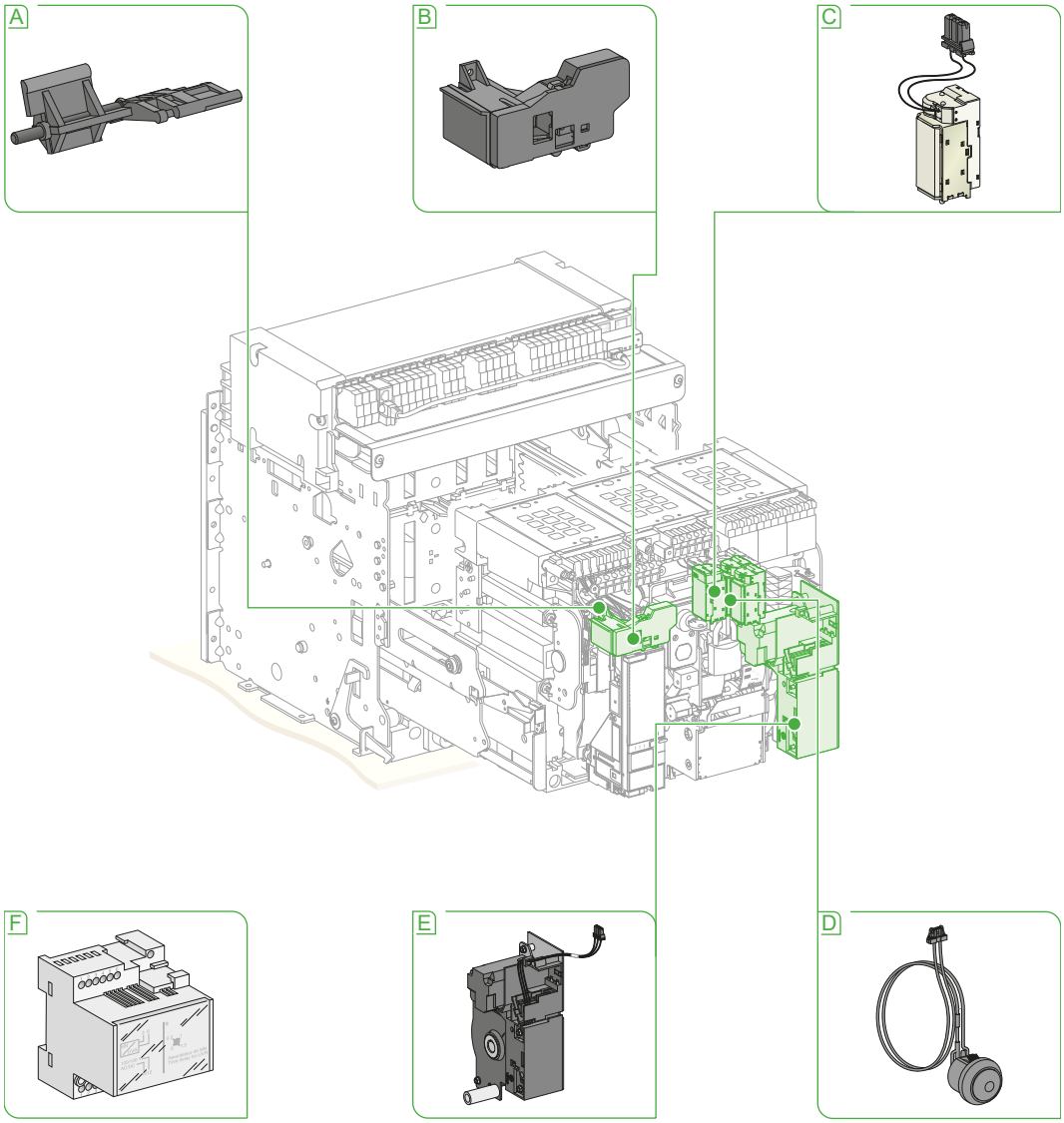

A RAR - automatic reset option

B RES - electric reset option

C
- XF - closing voltage release
- XF diag&com - diagnostic and communicating closing voltage release
- MX - opening voltage release
- MX diag&com - diagnostic and communicating opening voltage release 2nd MX or MX diag&com
- MN - undervoltage release
- MN diag - diagnostic undervoltage release

D BPFE - electric closing pushbutton

E MCH - gear motor

F
- R - delay unit non-adjustable
- Rr - delay unit adjustable for MN and MN diag undervoltage release.

Operation efficiency

Controlling

PB116196_50.eps

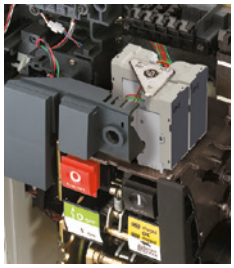

Remote ON/OFF

Various solutions are possible that use different combinations of the accessories below.

■ **Basic voltage release** to voltage release open and close orders:
□ XF - closing voltage release
□ MX - opening voltage release
□ MN - undervoltage release

The circuit breaker can be equipped with:
- an XF voltage release,
- an MX voltage release,
- a 2nd MX voltage release or an MN undervoltage release.

■ **Diagnostic & Communicating voltage release** with diagnostic and communication functions in addition to releasing open and close orders:
□ XF diag&com - diagnostic and communicating closing voltage release
□ MX diag&com - diagnostic and communicating opening voltage release
□ MN diag - diagnostic undervoltage release

The diagnostics and communicating voltage release require the installation of the insulation module.

The circuit breaker can be equipped with:
- an XF diag&com voltage release,
- an MX diag&com voltage release
- a 2nd MX diag&com voltage release or an MN diag undervoltage release. The 2nd MX diag&com voltage release and the MN diag undervoltage release provide only the diagnostic function. The communicating function cannot be performed. The second MX diag&com voltage release can only be installed after the delivery of the circuit breaker. This is an after sales adaptation.

Note: MN undervoltage release and MN diagnostic undervoltage release can be used with non adjustable and adjustable delay unit R or Rr.

D

PB115972_50.eps

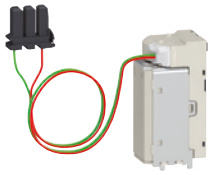

XF, MX and MN

■ **Electric Motor** to charge the spring:
□ Electric motor MCH

■ **Signalling Accessories** are often added to enhance convenience and safety:
□ ready-to-close contact PF
□ Device ON/OFF indication OF
□ fault-trip indication SDE

■ **Other Accessories** to complete the solutions:
□ Electric closing pushbutton BPFE. It requires the installation of an XF diag&com voltage release
□ Isolation module (compulsory when diagnostic & communication voltage release are used).

DB421346.ai

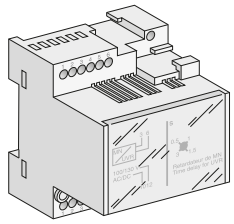

Adjustable or non-adjustable delay unit

Solutions

Three remote control solutions are provided by MasterPact MTZ

Customer wiring with basic voltage release (XF, MX, MN)

MasterPact MTZ can be opened and closed remotely by using the output contacts of a PLC or a pushbutton wired to the voltage release (MX, MN, XF).
This solution requires hard wiring between the circuit breaker and the location from where the operation is conducted.

DB421188.ai

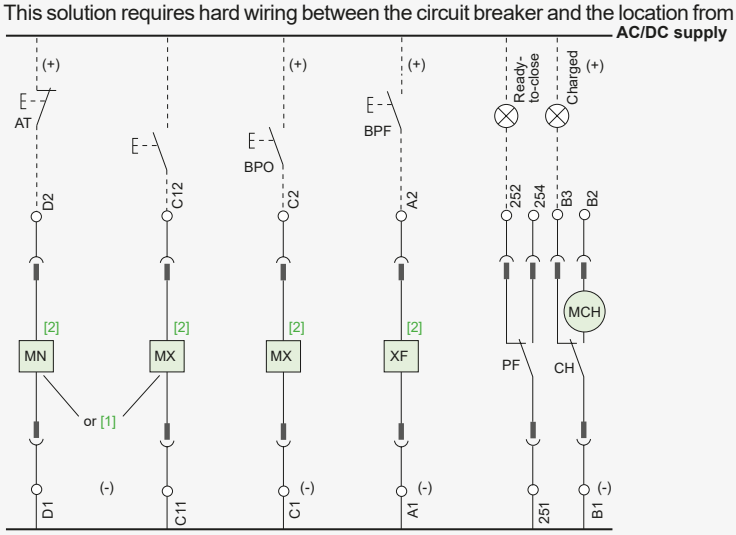

[1] Possibility to add a second MX voltage release or an MN undervoltage release.
[2] The maximum lengths of the wiring between the AC/DC power supply and voltage release terminals A1-A2 / C1-C2 / C11-C12 / D1-D2 are given page D-18.

Customer wiring with voltage release with diagnostic function (XF diag&com, MX diag&com, MN diag)

When voltage release with diagnostic functions are used in customer wiring, the following diagnosis information is available in addition to remote operation. The information can be accessed through the MicroLogic X HMI, wireless communication, and EcoStruxure Power Commission through USB connection.

- Identify the type of the voltage release, MX diag&com, XF diag&com or MN diag.
- Detect whether the voltage release is functioning properly by comparing the voltage release order and the opening/closing status of the circuit breaker.
- Check whether there is any breakage of the wiring in the voltage release periodically (every 30 seconds).
- Identify whether the order comes from BPFE option.
- Identify whether the order is a permanent order.
- Count the operation cycle of the voltage release.

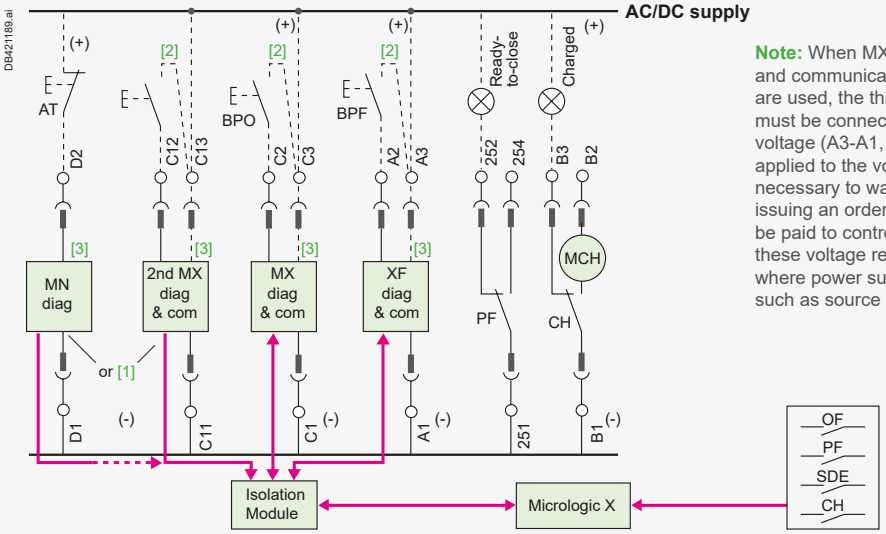

Note: When MX or XF diagnostic and communicating voltage release are used, the third wire (A3, C3, C13) must be connected. When the control voltage (A3-A1, C3-C1, C13-C11) is applied to the voltage release, it is necessary to wait 1.5 seconds before issuing an order. Special attention shall be paid to control voltage when using these voltage release in application where power supply may disappear such as source change over systems.

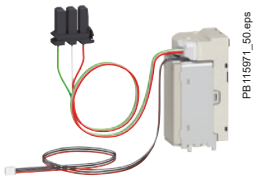

XF diag&com,
MX diag&com, MN diag

OF : ON/OFF indication contact.

PF : Ready to close contact.

SDE : Fault trip indication contact.

CH : Mechanism charged.

Communication Bus connection with diagnostic & communication voltage release (XF diag&com, MX diag&com)

When a communication system is present, the MasterPact MTZ can be opened and closed from a remote control system such as a SCADA, through the communication bus.

In addition to the functionalities of the previous solution, this solution brings the following benefits:

- Bus solution provides more flexibility geographically and saves wiring costs
- Diagnosis information can be accessed remotely through the communication network but not from the MicroLogic X HMI.

A bus solution and point-to-point solution can be implemented together when using communication voltage release.

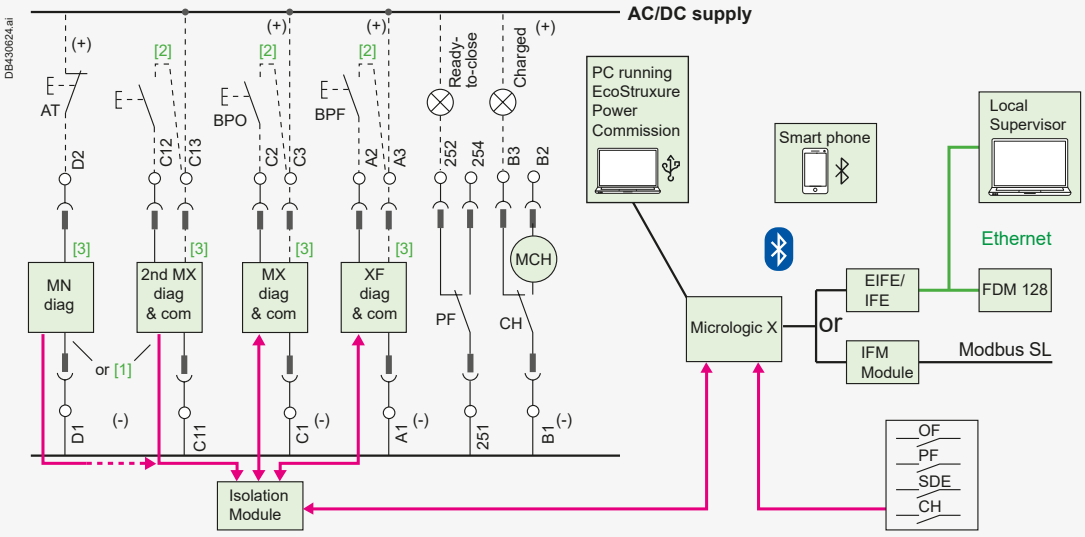

[1] Possibility to add a second MX diag&com voltage release or an MN diag undervoltage release. The second MX diag&com voltage release can only be installed after the delivery of the circuit breaker. This is an after sales adaptation.

[2] Maximum length of the two wires cables between A2-A3 / C2-C3 / C12-C13: 5 m.

[3] The maximum lengths of the wiring between the AC/DC power supply and voltage release terminals A1-A3 / C1-C3 / C11-C13 /D1-D2 are given page D-18.

Operation efficiency

Controlling

The table below summarizes all the possibilities for controlling the On/Off status of a breaker in different operating modes.

Connection	Voltage release	Method	MicroLogic X Operation Mode Setting			Exclusiveness [1]	Diagnostic Information [2]
			Manual	Auto Local	Auto Remote		
Customer wiring	Basic voltage release (XF, MX, MN)	Pushbutton	●	●	●		
		Wireless pushbutton (XB5)	●	●	●		
	Diagnostic & Communicating voltage release (XF diag&com, MX diag&com, MN diag)	Pushbutton	●	●	●		●
		BPFE voltage release connection	●	●	●		●
		Wireless pushbutton	●	●	●		●
		BPFE via MicroLogic X	●	●	●		●
		Digital input (IO module)		●	● [3]	●	●
		EcoStruxure Power Commission via USB		●		●	●
		Ecostruxure Power Device App app (Bluetooth)		●		●	●
Bus solution with COM communication option	Diagnostic & Communicating voltage release (XF diag&com, MX diag&com)	BPFE via MicroLogic		●	●		●
		Digital Input (I/O module)		● [3]	●	●	●
		EcoStruxure Power Commission via USB		●		●	●
		SCADA via IFE/EIFE/IFM			●	●	●
		FDM128 via IFE/EIFE			●	●	●
		EcoStruxure Power Commission via IFE/ EIFE			●	●	●
		Webpage via IFE/EIFE			●	●	●
		Ecostruxure Power Device App app (Bluetooth)		●		●	●

[1] Exclusiveness means that the operation can only be done in one particular operating mode.
For example, when customer wiring with basic voltage release is used, On/Off operation of the breaker using the pushbutton has no exclusiveness as it can be done in all three operating modes.
[2] Details of diagnostic functions can be found on page B-22.
[3] When the rotary switch of the I/O module is switched to I2/I3, operation can only be done in Auto remote mode. When it is switched to I4/I5 operation can only be done in auto local mode.

D

Selection of voltage release

Three common user cases are presented here to illustrate the possible choice of voltage release.

User case I: Remote Opening

This case is applicable when only remote opening is required. It is necessary to respond to an emergency.
This solution enables the emergency opening of the circuit breaker.

User case II: Remote Opening and Closing

When both remote opening and remote closing are required, this solution can be implemented.
As the spring needs to be charged to close the circuit breaker, an electric motor MCH needs to be installed in this solution.

User Case III: Remote closing and opening with 2nd MX or MN voltage release

For safety reasons, redundancy of mechanisms is required in certain installations. A second MX/MX diag&com or MN/MN diag can be added for this purpose.

The additional MN diag benefits the following situations.

- When the voltage drops by 35 % to 70 % of its rated voltage, MN diag will open the breaker automatically.
- When MX diag&com fails to receive the order or fails to voltage the voltage after receiving the order, MN diag can be triggered to voltage the voltage to open the circuit breaker.

	Customer wiring with basic voltage release	Customer wiring with diagnostic & communicating voltage release	Communication bus connection with diagnostic & communicating voltage release
User Case I: Remote Opening	**Option I:** ■ Opening voltage release MX **Option II:** ■ Instantaneous undervoltage release MN	**Option I:** ■ Opening voltage release MX diag&com **Option II:** ■ Instantaneous undervoltage release MN diag	**Option I:** ■ Opening voltage release MX diag&com
User Case II: Remote Opening and Closing	**Option I:** ■ Opening voltage release MX ■ Closing voltage release XF ■ Electric motor MCH **Option II:** ■ Instantaneous undervoltage release MN ■ Closing voltage release XF ■ Electric motor MCH	**Option I:** ■ Opening voltage release MX diag&com ■ Closing voltage release XF diag&com ■ Electric motor MCH **Option II:** ■ Instantaneous undervoltage release MN diag ■ Closing voltage release XF diag&com ■ Electric motor MCH	**Option I:** ■ Opening voltage release MX diag&com ■ Closing voltage release XF diag&com ■ Electric motor MCH
User Case III: Remote Closing and Opening with 2nd MX or MN voltage release	**Option I:** ■ Opening voltage release MX ■ Closing voltage release XF ■ Electric motor MCH ■ Instantaneous undervoltage release MN	**Option I:** ■ Opening voltage release MX diag&com ■ Closing voltage release XF diag&com ■ Electric motor MCH ■ Instantaneous undervoltage release MN diag	**Option I:** ■ Opening voltage release MX diag&com ■ Closing voltage release XF diag&com ■ Electric motor MCH ■ Instantaneous undervoltage release MN diag

Note:
- Adjustable or non adjustable delay unit can be added to MN and MN diag in all situations.
- An isolation module is required for all connections between MicroLogic X and diagnostic & communicating voltage release (XF diag&com, MX diag&com and MN diag).
- When a 2nd MX diag&com or a MN diag undervoltage release is used, the diagnostic function only can be performed for these two voltage release.

The communication function is not provided.

Operation efficiency

Controlling

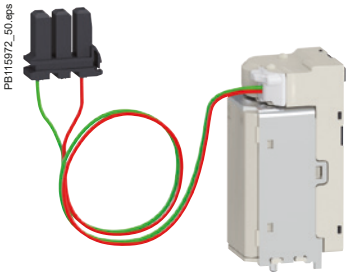

Voltage releases XF and MX

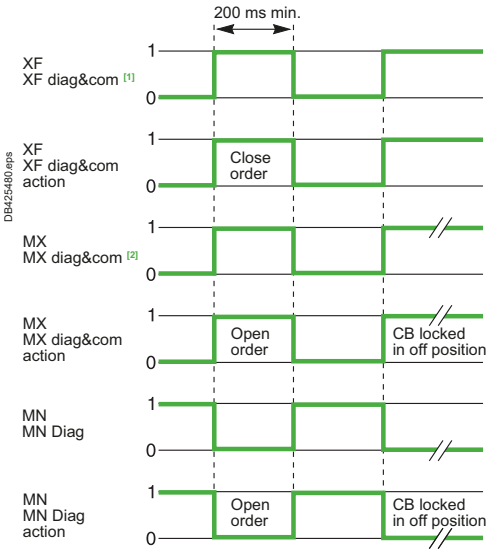

[1] For XF diag&com the supply shall be present between terminals A1-A3.
[2] For MX diag&com the supply shall be present between terminals C1-C3.

Basic voltage release and diagnostics & communication voltage release general characteristics

After receiving the command, the closing/opening voltage release instantaneously triggers the mechanism to close/open the circuit breaker. For MN, it also opens the circuit breaker when its supply voltage drops to a value between 35 % and 70 % of its rated voltage. Circuit breaker closing is possible only when the supply voltage of the voltage release returns to 85 % of its rated value.

- MN undervoltage release locks the circuit breaker in OFF position when it is not energized.
- MX opening voltage release can lock the circuit breaker in OFF position if the order is maintained.

The XF, MX, MN, XF diag&com, MX diag&com, MN diag voltage release require a power supply separate from the MicroLogic X power supply.

Note: The minimum duration of the pulse operating order must be 200 ms.

Characteristics		XF, XF diag&com	MX, MX diag&com
Power supply	V AC 50/60 Hz	24 - 48 - 100/130 - 200/250 - 277 - 380/480	
	V DC	12 - 24/30 - 48/60 - 100/130 - 200/250	
Operating threshold		0.85 to 1.1 Un	0.7 to 1.1 Un
Consumption (VA or W)		Hold: 4.5 Pick-up: 200 (200 ms)	Hold: 4.5 Pick-up: 200 (200 ms)
Circuit breaker response time at Un		MTZ1: 55 ms ±10 MTZ2: 70 ms ±10 MTZ3: 80 ms ±10	50 ms ±10

Characteristics		MN, MN diag
Power supply	V AC 50/60 Hz	24 - 48 - 100/130 - 200/250 - 380/480
	V DC	24/30 - 48/60 - 100/130 - 200/250
Operating threshold	Opening	0.35 to 0.7 Un
	Closing	0.85 Un
Consumption (VA or W)		Hold: 4.5 Pick-up: 200 (200 ms)
MN consumption with delay unit (VA or W)		Hold: 4.5 Pick-up: 200 (200 ms)
Circuit breaker response time at Un		40 ms ±5 (MasterPact MTZ1)
		90 ms ±5 (MasterPact MTZ 2, MTZ3)

Recommended maximum cable lengths (m)

		12 V		24 V		48 V	
		2.5 mm²	1.5 mm²	2.5 mm²	1.5 mm²	2.5 mm²	1.5 mm²
MN, MN diag	U source 100 %	-	-	58	35	280	165
	U source 85 %	-	-	16	10	75	45
MX-XF, MX diag&com, XF diag&com	U source 100 %	21	12	115	70	550	330
	U source 85 %	10	6	75	44	350	210

Note: The indicated lengths are given for each of the two wires of the cables.

Diagnostic & communicating voltage release specificities

The new generation of communicating voltage release brings two major benefits compared with the basic voltage release, diagnostic and communication functions.

Diagnostic Function

Incorrect operation or failure of the voltage release can cause damage to the electric network. The new function of the diagnostic and communicating voltage release provides the diagnostic information and prevents incorrect operations that can damage the equipment.

These voltage release can perform the following diagnosis and communicate the results through MicroLogic X.

- Identify the type of the voltage release, MX diag&com, XF diag&com or MN diag
- Detect whether the voltage release is functioning properly by comparing the voltage release order and the opening/closing status of the circuit breaker
- Check whether there is any breakage of the wiring in the voltage release periodically
(every 30 seconds)
- Identify whether the order comes from BPFE option
- Identify whether the order is a permanent order
- Count the operating cycles of the voltage release

Results can be read through all the different ways of retrieving information from MicroLogic X as presented in chapter B, including HMI, wireless communication, and EcoStruxure Power Commission through a USB connection. If the voltage release are connected to the communication system, they can also be accessed through the communication system.

Communication function

In addition to hard wiring, these voltage release can be connected to the communication network.
It allows the voltage release to be integrated in the communication system. It gives more flexibility for remote operations, and the diagnosis results mentioned in diagnostic function can be assessed remotely as well.
MN diag only has the diagnostic function. It cannot be connected to a communication network.

New voltage release action type

In addition to the diagnostic function, a major new feature of the new generation is the voltage release action type. The new generation no longer has the pulse-type voltage release; the voltage release can be maintained as long as the order is maintained. Because of the new feature, MX diag&com can lock the circuit breaker in the OFF position when the order is maintained.

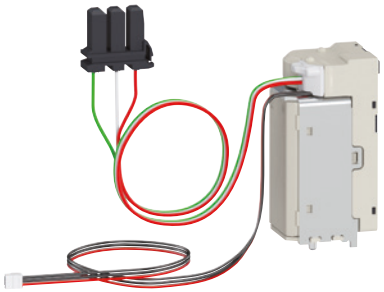

PB115971_50.eps

XF diag&com, MX diag&com, MN diag

MN delay units

To reduce circuit breaker nuisance opening during short voltage drops, MN delay units can be installed to delay the MN undervoltage release and only trigger the voltage release when voltage is low for a certain period of time. It can be disabled by an emergency OFF button to obtain instantaneous opening of the circuit breaker.

Two versions of the delay unit are available, adjustable and non-adjustable.

Characteristics		
Power supply V AC 50-60 Hz /DC	Non-adjustable	100/130 - 200/250
	Adjustable	48/60 - 100/130 - 200/250 - 380/480
Operating threshold	Opening	0.35 to 0.7 Un
	Closing	0.85 Un
Delay unit consumption	Pick-up: 200 (200 ms)	Hold: 4.5
Circuit breaker response time at Un	Non-adjustable	0.25 s
	Adjustable	0.5 s - 1 s - 1.5 s - 3 s

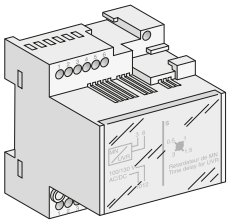

DB421346.ai

Adjustable or non-adjustable delay unit

Operation efficiency
Controlling

PB116199_50.eps

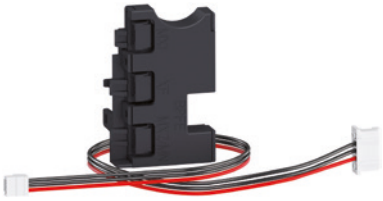

Isolation module

Isolation module (Compulsory for XF diag&com, MX diag&com, MN diag voltage release)

When diagnostic and communicating voltage release are required, the internal isolation module for MicroLogic X is compulsory to provide reinforced insulation as per IEC 60664-1 (up to 12 kV). It is installed between the voltage release and MicroLogic X. Besides the isolation between the electric network and MicroLogic X, it also provides the insulation between the voltage release. It is necessary because the voltage release can be powered by different voltages.

DB421191.ai

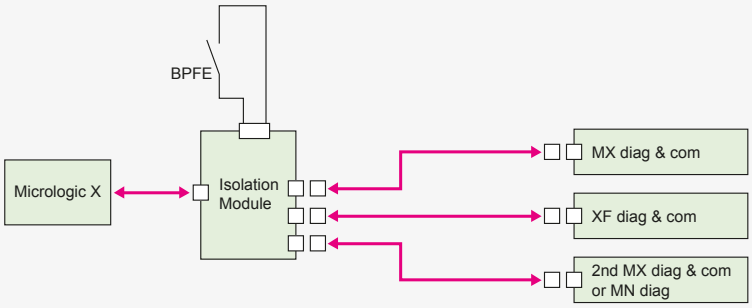

Note:
- only one isolation module is needed regardless of the number of voltage release installed. To facilitate the ordering process and make sure the isolation module is ordered for diagnostic and communicating voltage release, it will be added to the purchase list automatically when any of the XF diag&com, MX diag&com or MN diag is selected.
- for safety reasons it must be avoided to mix in the same circuit breaker 277-380/480 V voltage release with 24/48 V voltage release.
- when ordered the BPFE is de facto connected in factory to the isolation module.

PB116200_50.eps

Electric closing pushbutton BPFE

Electric closing pushbutton BPFE

Located on the front cover of the circuit breaker, this pushbutton carries out electric closing of the circuit breaker, taking into account the safety functions that are part of the control and monitoring system of the installation.
The BPFE requires a XF diag&com voltage release to be installed on the circuit breaker. The BPFE does not operate with a standard XF voltage release.
They are two solutions to implement the electric closing pushbutton. A standard solution and a customized solution:
- The standard solution is performed in factory. When the BPFE option is ordered, the circuit breaker is de facto delivered equipped with the BPFE and a XF diag&com voltage release, both connected on the isolation module. The two functions of the XF diag&com voltage release (remote control through MicroLogic X and diagnostic) are operational
- The customized solution can only be performed after the delivery of the circuit breaker. This is an after sales adaptation. The isolation module is removed and the BPFE directly connected to the diag&com voltage release.

For both solutions, terminal A2 of the XF diag&com voltage release can be used to close the circuit breaker by means of an external closing pushbutton. Terminal A3 can be used to insert the safety functions of the installation
For safety reasons, the BPFE is generally associated with the pushbutton locking VBP that forbids access to the mechanical closing pushbutton.

DB425695.eps

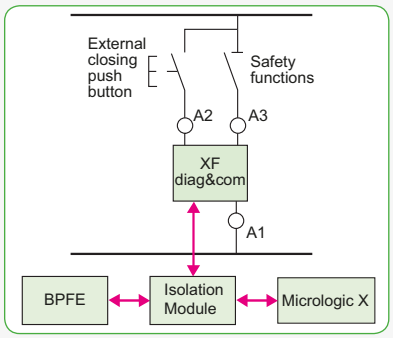

BPFE standard solution performed in factory

DB425694.eps

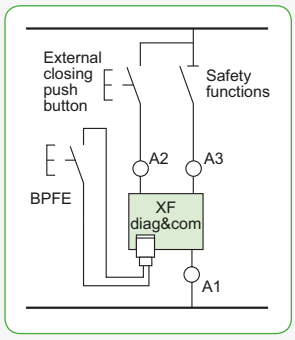

BPFE customized solution performed after sale

Life Is On Schneider Electric

Remote reset after fault trip

When a fault trip happens, the fault trip indicator SDE indicates 'fault' and the reset button pops up. To close the breaker, the reset button needs to be pressed down.

To do a remote reset after fault trip, two solutions, RES and RAR, are provided.

Electric reset after fault trip RES

This function resets the SDE fault trip indication and voltage releases the circuit breaker mechanism, the reset button goes in and circuit breaker closing is possible. A power supply of 100/130 V AC or 200/240 V AC is required to enable this function.

Note: The additional Fault Trip indication contact SDE2 is not compatible with RES.

Automatic reset after fault trip RAR

In the case of RAR, it is no longer required to press the reset button to enable the circuit breaker closing after tripping. The circuit breaker is closed with the Reset button still popped up and the SDE indication still indicating 'fault'. The SDE indications will remain in fault position until the reset button is pressed.

Note: To achieve remote closing after fault trip, closing voltage release XF and electric motor MCH are required in addition to RES or RAR.

Note: an opening order always takes priority over a closing order. If opening and closing orders occur simultaneously, the mechanism discharges without any movement of the main contacts. The circuit breaker remains in the open position (OFF).
In the event of maintained opening and closing orders, the standard mechanism provides an anti-pumping function by blocking the main contacts in open position.
Anti-pumping function. After fault tripping or intentional opening using the manual or electric controls, the closing order must first be discontinued, then reactivated to close the circuit breaker.
When the automatic reset after fault trip (RAR) option is installed, to avoid pumping following a fault trip, the automatic control system must take into account the information supplied by the circuit breaker before issuing a new closing order or blocking the circuit breaker in the open position (information on the type of fault, e.g. overload, short-time fault, earth fault, earth leakage, short-circuit, etc.).

DB419110.eps

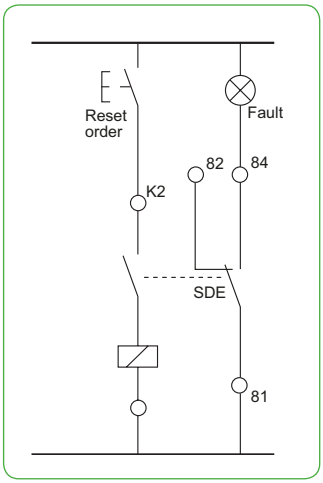

Remote reset after fault trip

DB429640.ai

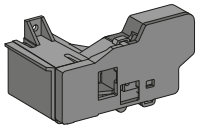

Electric reset after fault trip RES

DB429639.ai

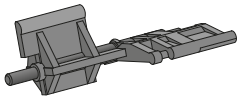

Automatic reset after fault trip RAR

Electric motor MCH

The electric motor automatically charges the spring mechanism when the circuit breaker is closed. Instantaneous reclosing of the breaker is thus possible following opening. The spring-mechanism charging handle can be used as a backup if the auxiliary power supply is absent.
The electric motor MCH is equipped as standard with a limit switch contact CH that signals the charged position of the mechanism.
The electric motor MCH require a power supply separate from the MicroLogic X power supply.

Characteristics		
Power supply	V AC 50/60 Hz	48/60 - 100/130 - 200/240 - 277- 380/415 - 400/440 - 480
	V DC	24/30 - 48/60 - 100/125 - 200/250
Operating threshold		0.85 to 1.1 Un
Consumption (VA or W)		180
Motor overcurrent		2 to 3 In for 0.1 s
Charging time		maximum 3 s for MasterPact MTZ1
		maximum 4 s for MasterPact MTZ2, MTZ3
Operating frequency		maximum 3 cycles per minute
CH contact		10 A at 240 V

PB100797-23.eps

Electric motor MCH for MasterPact MTZ1

PB100808-32.eps

Electric motor MCH for MasterPact MTZ2 and MTZ3

D

Protection of people and property

Locking and interlocking

Safety is always the priority. MasterPact MTZ provides a high degree of safety to both people and property through the following aspects:

- Locking and Interlocking
- Circuit Protection
- Operation Protection
- Mechanical Protection.

Locking and interlocking

It is of great importance to ensure that the breaker is only operated by a certified and authorized person.
It is for both the safety of the operator and the safety of the property. Another important aspect is to minimize the chances of incorrect operation which may lead to high safety risk.

Locking and interlocking accessories ensure that the circuit breaker is operated by the right person at the right time in accordance with local rules and regulations.

DB419914.ai

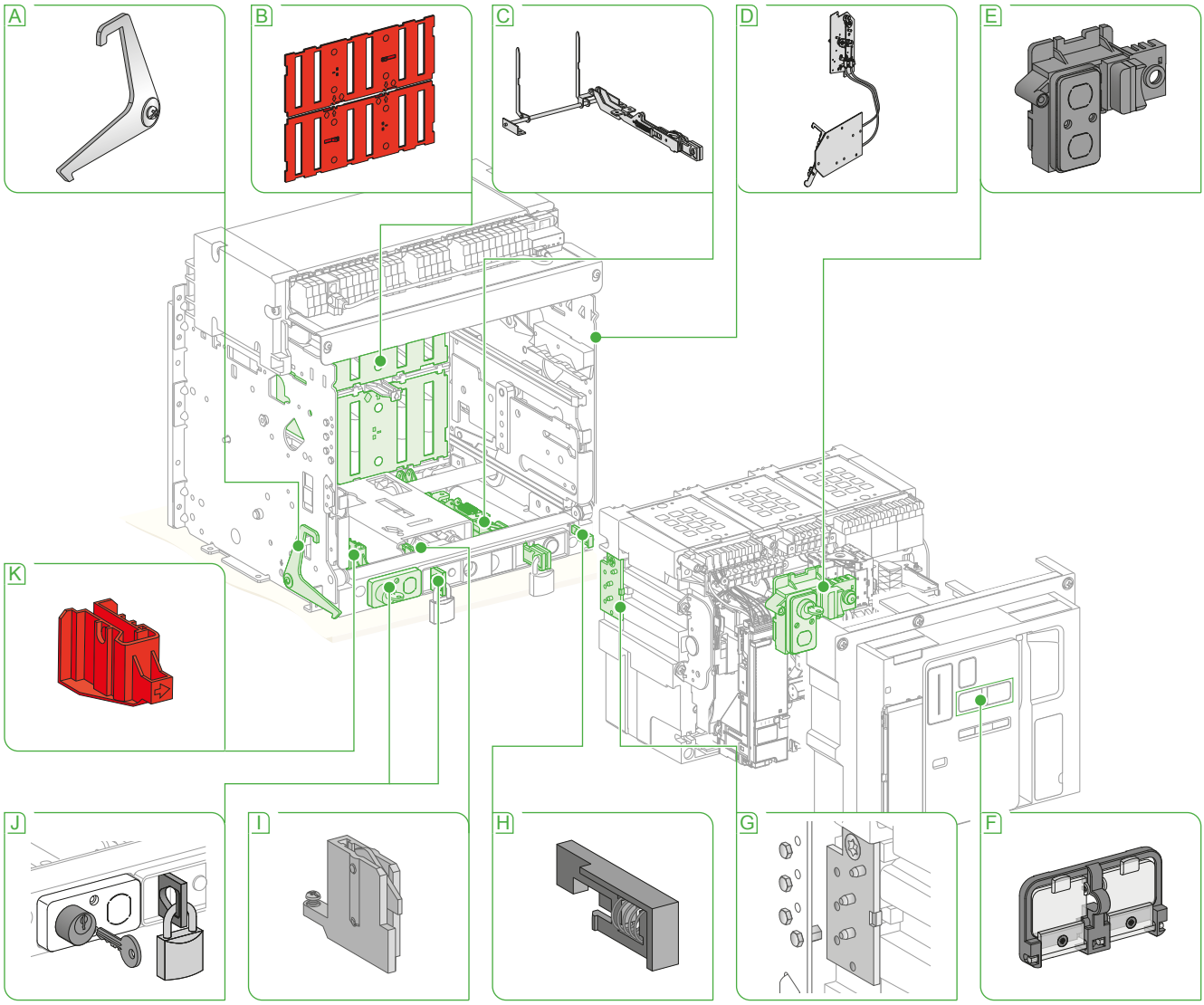

- A VPEC - door interlock catch
- B VO - Safety shutters
- C VIVC - shutter position indication and locking
- D IPA - cable-type door interlock
- E VCPO/VSPO - OFF position locking
- F VBP - ON/OFF pushbutton locking
- G V DC - mismatch protection
- H VPOC - racking interlock
- I IBPO - interlock between racking handle and OFF pushbutton
- J ■ VSPD - Chassis locking in disconnected position: by keylock
  ■ Chassis locking in disconnected position by padlock
- K Shutter locking block

Protection of people and property

Locking and interlocking

Pushbutton locking VBP

Open and close pushbuttons can be blocked by using VBP. It consists of two transparent covers which can be locked with any of the following:
- padlock (not supplied), 5 to 8 mm,
- lead seal,
- two screws.

The opening button and the closing button can be locked independently.

PB116201_60.eps

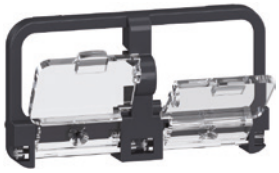

Access to pushbuttons protected by transparent cover VBP.

Device locking in the OFF position VCPO with padlocks, VSPO with keylocks

The circuit breaker can be locked in the OFF position by physically maintaining the opening pushbutton pressed down:
- using padlocks (one to three padlocks, not supplied), shackle Ø5 to 8 mm
- using keylocks (one or two different keylocks, supplied).

Keys may be removed only when locking is effective (Profalux or Ronis type locks).
The keylocks are available in any of the following configurations:
- one keylock
- one keylock mounted on the device + one identical keylock supplied separately for interlocking with another device
- two different keylocks for double locking.

Profalux and Ronis keylocks are compatible with each other.
A locking kit (without locks) is available for installation of one or two keylocks (Ronis, Profalux, Kirk or Castell).

PB116202_60.eps

Pushbutton locking with padlock VBP.

Accessory-compatibility
For MasterPact MTZ1: 3 padlocks or 1 keylock.
For MasterPact MTZ2, MTZ3: 3 padlocks and/or 2 keylocks.

For MTZ1, either keylock or padlock can be used. For MTZ2 and 3, padlock will always be available when keylock is selected. Padlock and keylock can be used at the same time.

PB116203_35.eps

OFF position locking with padlock VCPO.

Disconnected position locking with padlocks (standard) or keylocks (VSPD option)

The circuit breaker can be locked in its disconnected position by using the locks on the chassis. This feature is accessible via the cut out door closed.
Two options are available:
- using padlocks (standard), up to three padlocks (not supplied),
- using keylocks (optional), one or two different keylocks are available.
  Profalux and Ronis keylocks are available in different options:
  - one keylock,
  - two different keylocks for double locking,
  - one (or two) keylocks mounted on the device + one (or two) identical keylocks supplied separately for interlocking with another device.

A locking kit (without locks) is available for installation of one or two keylocks (Ronis, Profalux, Kirk or Castell).

PB116204_40.eps

OFF position locking with keylock VSPO.

PB116205_60.eps

Disconnected position locking with padlocks.

Connected, disconnected and test position locking

The connected, disconnected and test positions are shown by an indicator and are mechanically indexed. The exact position is obtained when the racking handle blocks. A release button is used to free it.

As standard, the circuit breaker can be locked only in disconnected position by padlocks or by keylocks..
On request, the locking system may be modified to lock the circuit breaker in any of the three positions: connected, disconnected or test.

PB116206_60.eps

Disconnected position locking by keylocks VSPD.

Protection of people and property

Locking and interlocking

PB116207_60.eps

Safety shutters with padlocking VO

D

PB116012.eps

Shutter position indication and locking VIVC

DB419918.ai

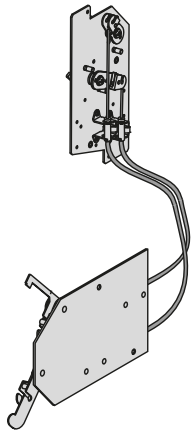

Cable-type door interlock IPA

Safety shutters with padlocking VO

When the circuit breaker is in the disconnected or test position, there is a possibility for an operator to accidentally touch the disconnected contact cluster or to accidentally slide back to the connected position, causing a safety risk to the operator and to the installation.

Mounted on the chassis, safety shutters close automatically when the breaker is in disconnected or test position. It ensures the insulation distance and physical segregation between the live parts and the compartment of the chassis (Degree of protection: IP 20).

The shutter-locking system locks the safety shutters in the closed position and prevents the insertion of the device. For MTZ1, safety shutters can be padlocked directly. For MTZ 2/MTZ3, the shutter-locking system is made up of separate parts that can be padlocked.

There are in total 2 blocks for MTZ2 and 4 blocks for MTZ3.

For MTZ 2/MTZ3, a support at the back of the chassis is used to store the blocks when they are not in use.

Shutter position indication and locking VIVC

Alternatively, shutter position indication and locking (VIVC) can also be used to lock the safety shutters.

This device is installed on the chassis front plate and allows the locking operation to be realized outside the chassis compartment. The upper and lower shutters can be indicated independently and locked either independently or together.
One to three padlocks can be used. (padlocks are not supplied)

Note: This option is applicable for MTZ2/3 only.

Cable-type door interlock IPA

This option prevents door opening when the circuit breaker is closed and prevents circuit breaker closing when the door is open.
To implement this option, a special plate associated with a lock and a cable is mounted on the right side of the circuit breaker.
This option is not compatible with the source changeover function.
This option is identical for fixed and drawout versions.

Protection of people and property

Locking and interlocking

Racking interlock VPOC

This device prevents insertion of the racking handle when the cubicle door is open.

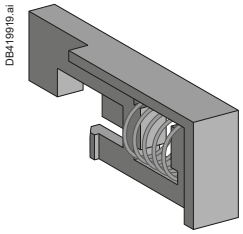

Racking interlock VPOC

Door interlock catch VPEC

Mounted on the right or left-hand side of the chassis, this device inhibits opening of the cubicle door when the circuit breaker is in connected or test position.
If the breaker is put in the connected position with the door open, the door may be closed without having to disconnect the circuit breaker.

Door interlock catch VPEC

Racking interlock between racking handle and OFF pushbutton IBPO (for MTZ2, MTZ3 only)

This option makes it necessary to press the OFF pushbutton in order to insert the racking handle and holds the device open until the handle is removed.

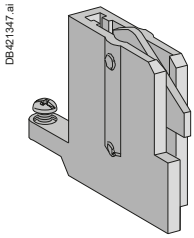

Racking interlock between racking handle and OFF pushbutton IBPO (for MTZ2, MTZ3 only)

Mismatch protection V DC

Mismatch protection ensures that a circuit breaker is inserted only in a chassis with compatible characteristics. It is made up of two parts (one on the chassis and one on the circuit breaker) offering twenty different combinations that the user may select from.

Mismatch protection V DC

D

Protection of people and property

Circuit protection

MicroLogic X external sensors and voltage measurement inputs enlarge the protection functions of MicroLogic X. Instantaneous voltage release also prevents property from being damaged.

DB419900.ai

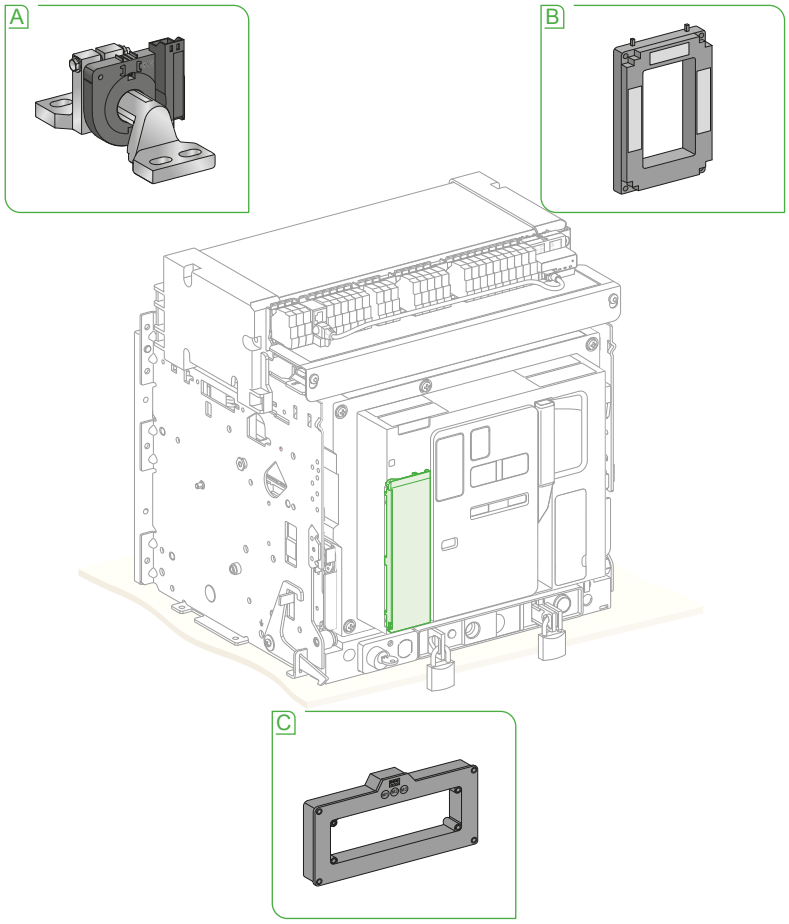

A TCE - external sensor for neutral and residual earth fault protection

B SGR - external sensor for source ground return protection

C Rectangular sensor for earth-leakage protection

TCE external sensor for neutral and residual earth fault protection

Installed on the neutral conductor,the external sensor enables circuit breaker to perform:
- neutral protection for 3P only
- neutral current measurement
- earth fault protection for 3P circuit breakers in TNS System.

The rating of the sensor (CT) must be compatible with the rating of the circuit breaker:
- MTZ1 06 to MTZ1 16: TC 400/1600
- MTZ2 08 to MTZ2 20: TC 400/2000
- MTZ2 25 to MTZ2 40: TC 1000/4000
- MTZ3 40 to MTZ3 63: TC 4000/6300.

For MTZ1 or MTZ2, a single sensor with a single wire is provided.
For MTZ3 both single sensor with single wire and double sensor with double wire are available.

For oversized neutral protection the sensor rating must be compatible with the measurement range: 1.6 x In (available up to MTZ2 40 for MTZ2 and MTZ1 16 for MTZ1).

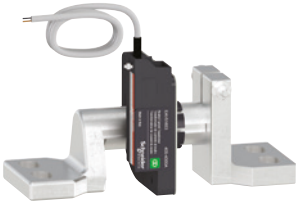

LV833576SP_image.eps

External sensor for neutral and residual earth fault protection (TCE)

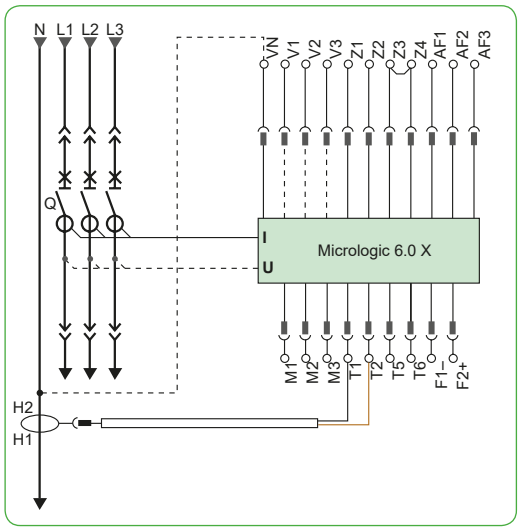

DB421680.ai

SGR External sensor for source ground return protection

The sensor is installed around the connection of the transformer neutral point to the earth and connected to the MicroLogic 6.0 X control unit via an MDGF module to provide the source ground return (SGR) protection.

Connection of the secondary circuit
MasterPact equipped with a MicroLogic 6.0 X:
- between external transformer and MDGF module:
  - unshielded cable with 1 twisted pair,
  - maximum length 150 meters,
  - cable cross-sectional area 0.4 to 1.5 mm^2,
  - recommended cable: Belden 9409 or equivalent.
- between MDGF module and MicroLogic X:
  - unshielded cable,
  - maximum length 10 meters,
  - cable cross-sectional area 0.8 to 2.5 mm^2,
  - recommended cable: Belden 9409 or equivalent,
  - terminals 5 and 6 may not be used at the same time:
  - use terminal 5 for MTZ1 and MTZ2,
  - use terminal 6 for MTZ3.

06133779A.eps

External sensor for source ground return protection (SGR)

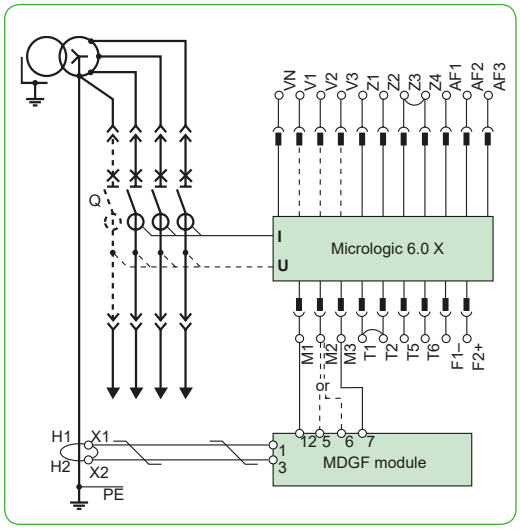

DB421148.AI

Protection of people and property

Circuit protection

PB100834-48.eps

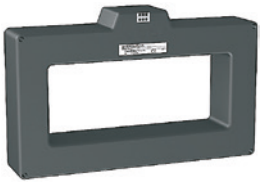

Rectangular sensor for earth-leakage protection

DB419103.eps

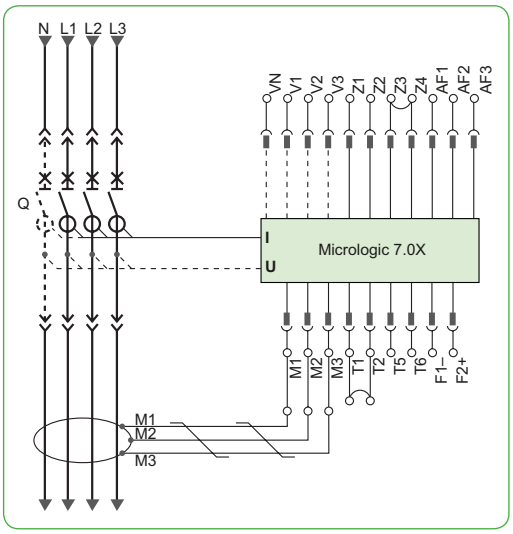

Rectangular sensor for earth-leakage protection

Rectangular sensor enables the detection of zero-phase sequence current which is required for the earth-leakage protection.
It is installed around the busbars (phases + neutral) and comes with two sizes to cover different installation needs.
Inside dimensions (mm):

- 280 x 115 up to 1600 A for MasterPact MTZ1 and MTZ2, MTZ3
- 470 x 160 up to 3200 A for MasterPact MTZ2, MTZ3.

D

Life Is On Schneider Electric

Protection of people and property

Operation and mechanical protection

Operating protection
Adding safety check points and reducing the safety risk during daily operation to the minimum level is a primary concern. The following accessories add safety especially when physical touching of the circuit breaker is required.

Mechanical protection
In addition to the protection using electrical components, these accessories use simple mechanical structures to enhance the safety of both people and property.

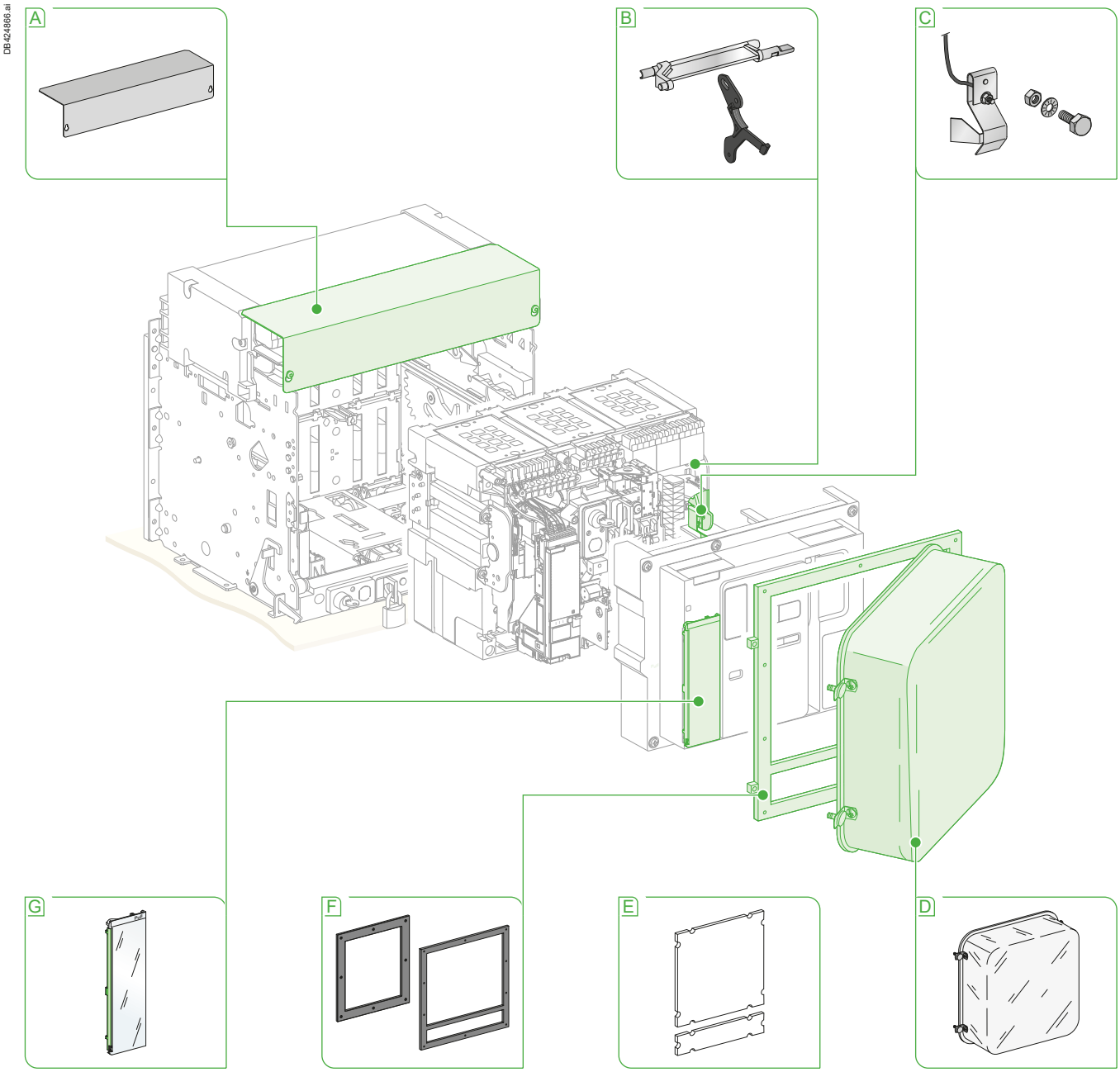

Operation protection

- A CB - terminal block shield
- B DAE - automatic spring discharge before breaker removal
- C KMT - grounding kit

Mechanical protection

- D CCP - transparent cover for escutcheon
- E OP - blanking plate for escutcheon
- F CDP - escutcheon
- G Transparent cover for MicroLogic X

Protection of people and property

Operation and mechanical protection

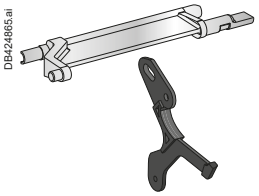

Automatic spring discharge DAE

Automatic spring discharge before breaker removal DAE (for MTZ2, MTZ3 only)

This option automatically discharges the spring before the breaker is removed from the chassis.

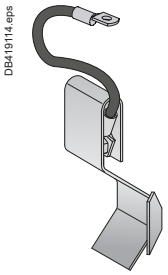

Grounding kit KMT.

Grounding kit KMT

This option allows the grounding of the breaker mechanism while the front cover is removed. The grounding is made via the chassis for the drawout version and via the fixation side plate for the fixed version.

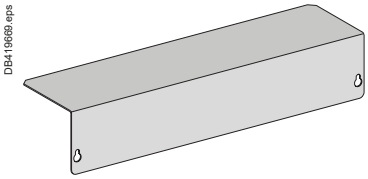

CB terminal block shield

CB terminal block shield

Optional equipment mounted on the chassis, the shield prevents access to the terminal block of the electrical auxiliaries.

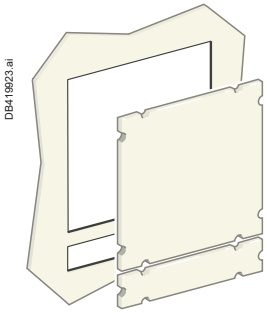

Blanking plate OP for escutcheon

Blanking plate OP for escutcheon

Used with the escutcheon, this option closes off the door cut-out of a cubicle not yet equipped with a device. It may be used with the escutcheon for both fixed and drawout devices.

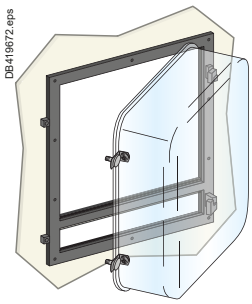

Transparent cover CCP for escutcheon.

Transparent cover CCP for escutcheon

Optional equipment mounted on the escutcheon, the cover is hinged and secured by a screw. It increases the degree of protection to IP54, IK10. It only adapts to drawout devices.

Door cut-out and escutcheon CDP

Optional equipment mounted on the door of the cubicle, the escutcheon increases the degree of protection to IP40 (circuit breaker installed free standing: IP30).
It is available in fixed and drawout versions.

Door cut-out (see chapter F for more information)

MTZ1		MTZ2/MTZ3	
Fixed	Drawout	Fixed	Drawout
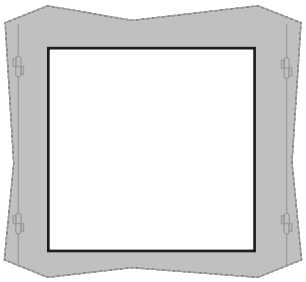 WIth or without escutcheon	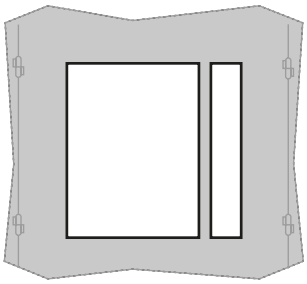 Without escutcheon	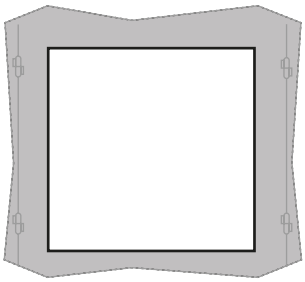 WIth or without escutcheon	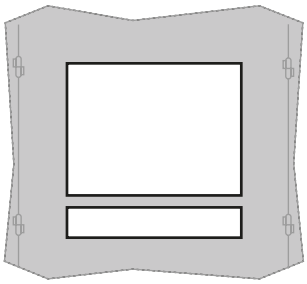 Without escutcheon
	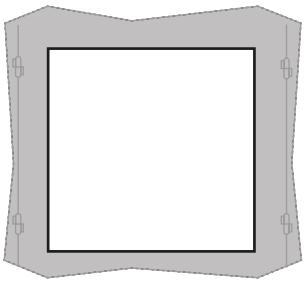 WIth escutcheon		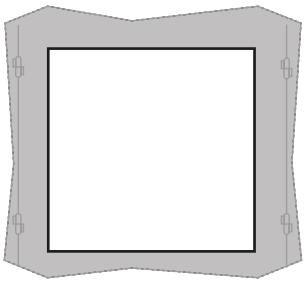 WIth escutcheon

Escutcheon (see chapter F for more information)

MTZ1		MTZ2/MTZ3	
Fixed	Drawout	Fixed	Drawout
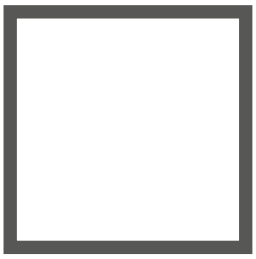	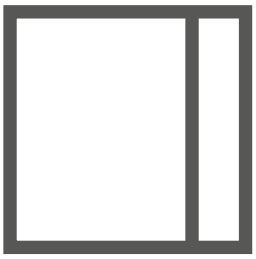	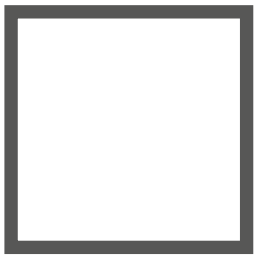	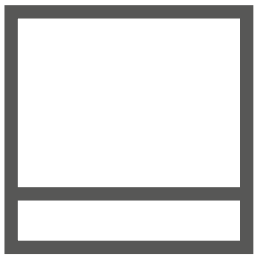

Power Availability and reliability

Power supplies

Power availability and reliability is crucial in all situations. These accessories make the different ways of powering up MicroLogic X possible.

DB432610.ai

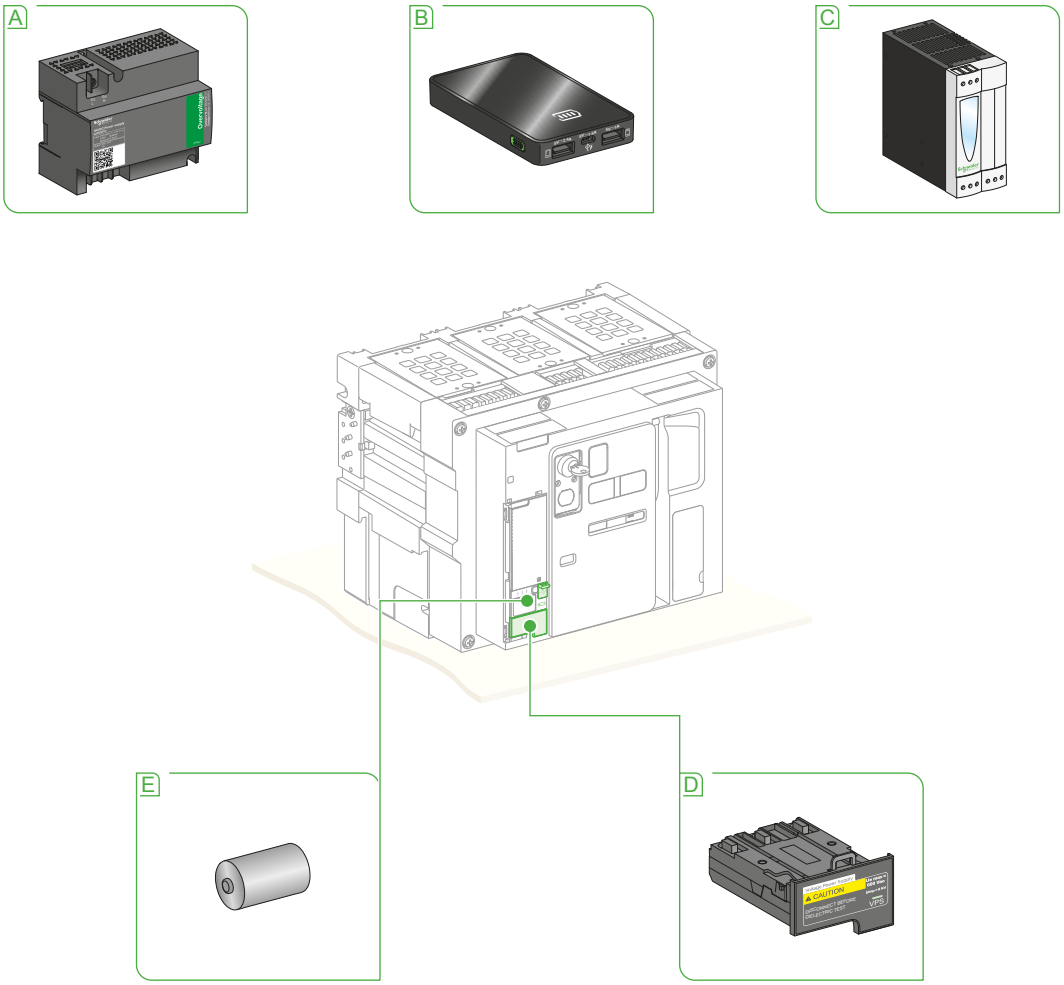

A External 24 V DC power supply module (AD)

B Power Pack for MicroLogic X

C ABL8 24 V DC power supply

D Voltage power supply VPS module

E Spare internal battery

MicroLogic X power supplies

■ The basic functions of protection performed by the MicroLogic X (LSIG: Long-time overload protection, Short-time short circuit protection, Instantaneous short circuit protection, Earth fault protection) do not require external power supply.
They are self powered by the currents delivered by the current transformers embedded in the MTZ circuit breaker, except the earth-leakage protection in MicroLogic 7.0 X which requires the installation of the VPS module.
■ When the circuit breaker load current is above 20 % of the rated current the proper operation of all the functions processed by the MicroLogic X is ensured.
This includes:
□ The functions of protection
□ All the measures with the accuracies specified on page B-21 of this catalog
□ The diagnosis
□ The HMI (Embedded display and key pad)
□ The wireless features (Bluetooth and proprietary connectivity).

■ When the load current falls below 20 % of the rated current, the VPS module or an external 24 V DC power supply is needed to maintain the operation of MicroLogic X with its specified performances.
■ The external 24 V DC is compulsory to supply power the following devices and functions associated with MicroLogic X:
□ EIFE module
□ IFE module
□ IFM module
□ I/O module
□ M2C programmable contact
□ ESM - ERMS switch module
□ FDM 128.
□ The optional protections provided by the optional digital modules

Two types of 24 V DC power supplies are offered to supply power to the MicroLogic X and its associated modules:
■ the 24 V DC power supply module (AD)
■ the 24 V DC Universal Phaseo ABL8 RPS 24050 and ABL8 RPS 24030 power supply.

In addition, a portable PowerPack battery can be used to supply power to the MicroLogic X through its mini USB port.

Voltage Power Supply VPS module for MicroLogic X

When the current is below 20 % of the rated current providing presence of three-phase or two-phase voltage downstream of the circuit breaker (circuit breaker closed), the VPS module ensures the operation and performance of MicroLogic X.
This includes:
■ All the measures with the accuracies specified page B-21 of this catalog
■ The HMI (Embedded display and key pad)
■ The wireless features(Bluetooth and proprietary connectivity).

The VPS module is provided as standard for MicroLogic 7.0 X to perform earth leakage protection. The input voltage of the VPS module is limited to 600 V.
Above 600 V it shall be supplied from an external voltage by means of the PTE option and voltage transformers. Presence of 24 V on VPS output is signaled by a green LED on the front face of the module. The VPS module can be easily installed in the bottom part of the MicroLogic X, with two positions:
■ First position: The VPS module is plugged and all connections are realized (AC inputs and 24 DC output). A mechanical interlock locks the VPS in this position. To unlock the VPS it is mandatory to open the battery cover and pull the locking handle
■ Second position: This is an intermediate position where no power is connected (AC inputs and 24 DC output). In this position the VPS is completed isolated.
This position allows you to perform the switchboard dielectric tests without risks.

Power supply input		
Three phase	208 - 600 V AC +10% -30%	2.6 W
Two phase	208 - 600 V AC +10% -15%	1.7 W

Voltage Power Supply VPS module

PB115958_60.eps

D

Power Availability and reliability

Power supplies

LV454444.eps

External 24 V DC power supply module (AD)

D

External 24 V DC power-supply module (AD)

The external power-supply module makes it possible:
- to use the display even if the circuit breaker is open or not supplied (for the exact conditions of use, see the “electrical diagrams” part of this catalog)
- to display fault currents after tripping
- to modify settings when the circuit breaker is open (OFF position)

An external 24 V DC power supply is required for installation with communication, whatever the type of trip unit, for Micrologic with additional protection or advanced features.
This module is not designed to power on 24 V DC voltage releases and electric motor mechanism.
This module powers both the control unit and the M2C programmable contacts.
We recommended using the AD power supply due to its low stray primary secondary capacitance. Micrologic control unit may not function properly in noisy environment if used/installed with other power supplies.
If the COM option is used, a second dedicated power supply shall be used.
This module powers both the control unit and the M2C programmable contacts or ESM module.

Characteristics
- Power supply AC-to-DC or DC-to-DC
- Output voltage: 24 V DC ±5 %.
- Output current: 1 A.
- DIN rail or platine Fixing with Acti9 form factor
- Conducted emissions power line: class B per EN/IEC 61000-6-3.

24 V DC Universal Phaseo™ ABL8 power supplies

The Universal Phaseo ABL8 RPS 24050 and ABL8 RPS 24030 power supplies can be connected phase-to-neutral or phase-to-phase.
They deliver a voltage that is precise to 3 %, whatever the load and whatever the value of the AC supply, within the ranges 85 to 132 V AC and 170 to 550 V AC.
The Universal Phaseo ABL8 powers:

- circuit breaker communication module and interface
- programmable MicroLogic.

Characteristics

- Power supply AC-to-DC.
- Network frequency: 50/60 Hz (±5 %).
- Output voltage: 24 V DC ±3%.
- Output current: 3 or 5 A.
- DIN rail or platine Fixing.
- Conducted emissions power line: class B per EN/IEC 61000-6-3.

To assist cooling there must be sufficient clearance around the Universal range Phaseo power supplies:

- 50 mm above and below
- 10 mm on the side.

		ABL8RPS●●●●	Module AD
Over Voltage Category		Cat I per VDE 0106-1	Cat IV per IEC 62477-1 (AC model) Cat III per IEC 62477-1 (DC model) Cat III per UL 61010-1
Degree of pollution as per IEC 60664-1		2	3
Input supply voltage AC		100…120 V AC and 200…500 V AC	110-130 or 200-240 V AC
Input supply voltage DC		N/A	24-30 or 48-60 or 100-125 V DC
Dielectric	Input/Output	4 kV rms -1 mn.	3 kV rms - 1 mn. (110-130 V AC and 200-240 V AC model)
			3 kV rms - 1 mn. (110-125 V DC model)
			2 kV rms - 1 mn. (24-30 V DC and 48-60 V DC model)
	Input/Ground	3.5 kV rms -1 mn.	3 kV rms - 1 mn.
	Ouput /Ground	0,5 kV rms - 1 mn.	1.5 kV rms - 1 mn.
Temperature		■ 50 °C ■ 60 °C with 80 % of the rated current maximum	70°C
Output current		3 A (ABL8RPS24030) 5 A (ABL8RPS24050)	1 A
Inrush current for 2 ms		< 30 A	< 20 A
Ripple		200 mV peak-peak	200 mV peak-peak
Output voltage limits		24 to 28.8 V DC	22.8 to 25.2 V DC
Protection degree		IP20	IP4x front face / IP2x terminals / IP3x other

Note: For the applications requiring an over voltage category higher than 1, a surge arrester shall be associated to ABL8 RPS power supplies. The iQuick20prd type 2 surge arrester is recommended.

ABL8 RPS power supply

PF106349SE_ABL8RPS24050.eps

D

Power Availability and reliability

Power supplies

PB115956_60.eps

Mobile Power Pack for MicroLogic X

Status Indicators	
Battery capacity display	State explanation
	100 %
	70 %
	40 %
	15 %
	< 15 %
	0 %
	Battery charging in progress
	Internal fault

D

DB421457.ai

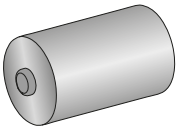

Spare internal battery

Mobile Power Pack for MicroLogic X

The mobile portable Power Pack battery is a manufactured & tested Schneider Electric device that can energize the MicroLogic X through its mini USB port.
It allows to use the embedded display & keypad for basic settings & reading or access to complementary tripping information during shutdown.
Mobile Power Pack can be easily recharged by connecting it to a PC or a charger equipped with a USB port.
The Remaining power available in Power Pack can be read when pressing the power button for 1 second.
The Power Pack can also be used to charge a smartphone (a USB cable with a mini USB port is provided for this purpose).
This item can be ordered as a spare part.

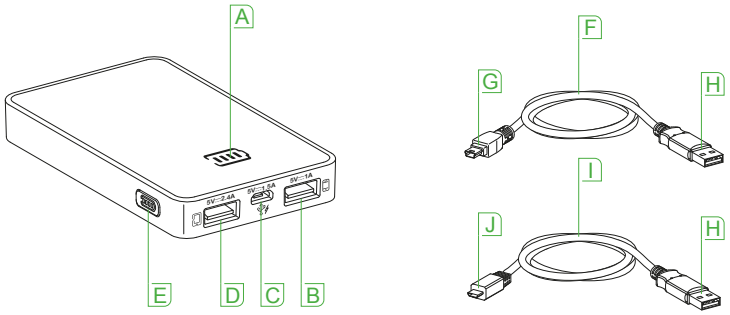

- A Battery capacity display
- B USB 5 V / 1 V output
- C Micro-USB 5 V / 1.5 A input
- D USB 5 V / 2.4 V output
- E Power button
- F Cable battery charging
- G mini USB connector
- H USB connector
- I Cable for power MicroLogic X trip unit
- J Micro USB connector

Spare internal battery

The MicroLogic X control unit is equipped with an internal battery dedicated to the supply of the trip causes LEDs and the internal clock. The battery can be replaced on site when discharged.
The battery is lithium type. Its service life is approximately ten years.
A test button on the front of the control unit is used to check the battery condition.

This item can be ordered as a spare part.

Integrate in Smart panels - Architecture and systems

Architecture overview E-2

Components
ULP interface module E-12
EIFE embedded Ethernet interface E-14
IFE Ethernet interface E-16
IFM Modbus interface E-18
I/O Application module E-20
FDM128 Display Unit E-22

Customer engineering tool:
EcoStruxure Power Commission software E-24

E

Other chapters

Select your circuit breakers and switch-disconnectors A-1
Select your MicroLogic X control unit B-1
Customize your MicroLogic X with digital modules C-1
Customize your circuit breaker with accessories D-1
Integrate in switchboard F-1
Integrate in special applications - Source-changeover systems G-1
Services H-1
Order your circuit breaker I-1

Architecture overview

Smart Panels
Enerlin'X

Ethernet-ready Smart Panels

Ethernet-ready Smart Panels enable electrical distribution control and expertise. 'Protect' - 'Measure' - 'Connect' are the 3 pillars of their technology.

PB115758.psd

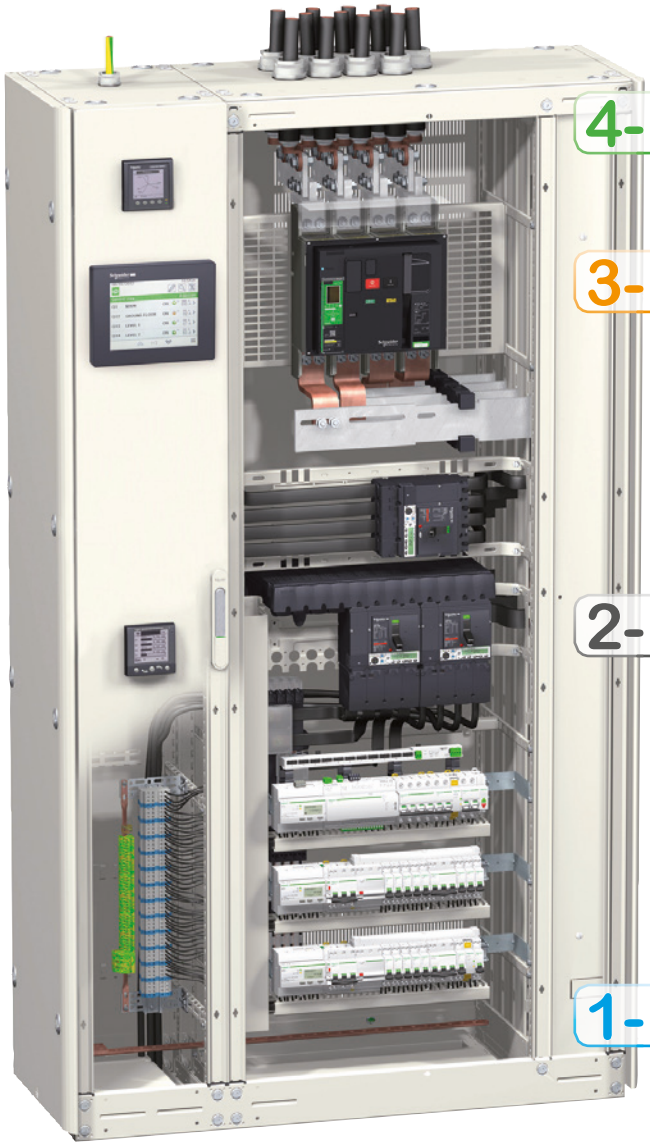

4- Act

3- Connect

Give a voice to the panel

Secured Ethernet network data transmission is now part of the intrinsic design of protection and metering devices.

2- Measure

Keeping a close eye on energy flows

The switchboard plays a key role in capturing building-related data, by gathering the critical protection and metering components.

1- Protect

Electrical protection is at the core of Smart Panel

Reliable and high-performance technology is present in every breaker and every residual current device.

E

Future savings, peace-of-mind

Access to Smart Panel status, values, is essential for taking advantages of monitoring and management services, locally or remotely.

Act in small/medium buildings

with FDM 128, Com'X 510, Power View, EcoStruxure™ Facility Expert

PB111801-60.eps

Electrical device monitoring and control with FDM 128, locally

Optimizing energy-efficiency

- Visualize, record energy consumption and WAGES.
- Comply with regulation.

DD385918.ai

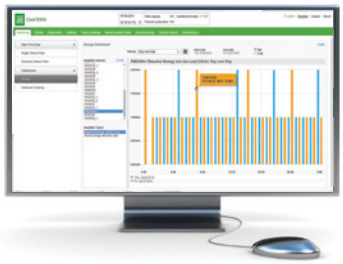

Com'X 510 web pages direct display, or Cloud based pages from other devices with Power View.

Improving continuity of service

- Get instant notifications.
- Manage with assets-maintenance platform.
- Get and analyze data for quick crisis-recovery.

DD385919.ai

DB423056.ai

Distance management with EcoStruxure™ Facility Expert on Smartphone, tablet, PC

Increasing maintenance efficiency

- Operate preventive maintenance tools.
- Follow maintenance & planning.
- Provide business owner instant access to maintenance reports.

E

Architecture overview

Day-to-day energy management
>> Power availability & quality, energy performance

For simply dealing with building user's needs and energy constraints.
EcoStruxure™ Building Management provides electrical management, monitoring and energy accounting.

Energy decisions are often crucial in large critical buildings, they must be informed.
EcoStruxure™ Power Monitoring Expert (software for PC) collects Smart Panels values to provide expert analysis.

E

Act in large non-critical buildings
with EcoStruxure™ Energy Expert

DB425660.ai

DB425661.ai

DB425334.ai

Managing equipment & key assets
- Check operating status, faults on custom on-line diagrams.

Monitoring electrical network
- Observe voltage disturbances, harmonics on graphics.
- Read power factor.

Accounting energy
- Record power meter data on dashboards.
- Allocate energy consumption with costs.
- Follow conservation goals.

Act in large critical buildings
with EcoStruxure™ Power Monitoring Expert [1]

DB425657.ai

DB425658.ai

DB425659.ai

Analysing Power Events
- Speed up downtime crisis recovery.
- Determine incident root cause, events sequence.
- Troubleshoot power quality issues.

Monitoring Power quality
- Be alerted of equipment affected by power quality issue.
- Compare power quality against industry standards.
- Collect facts for future discussion with Utility.

Analysing Energy Performance
- Evaluate building energy saving performance.
- Identify underperforming loads.
- Analyze Energy Conservation Measures (ECMs) according to ISO 50001 program.

[1] EcoStruxure™ Power Monitoring Expert, **http://pmedemo.biz/web/**
ID: demo & Password: demo

Smart Panels

Enerlin'X

MasterPact MTZ with MicroLogic X improves **Enerlin'X** digital system

By collecting circuit breaker and actuator status, electrical and counting values, Enerlin'X provides a simple and reliable access to local LCD displays and expert applications.

Energy management and electrical asset monitoring have never been simpler

DB419708.ai

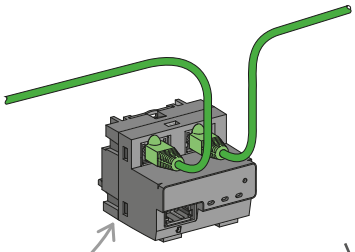

MasterPact MTZ drawout circuit breaker

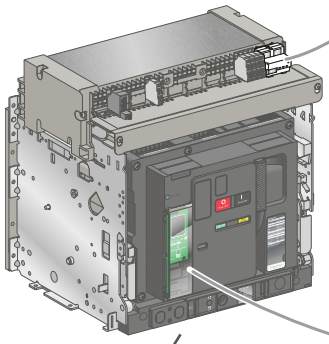

With its embedded Enerlin'X EIFE module MasterPact MTZ is ready to be connected to Ethernet

"IP connected" switchboards have become a key factor of evolution in energy management and continuity of service.

All your circuit breakers and energy data available via Ethernet and Modbus SL

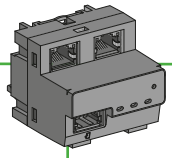

> Ecostruxure Power Device App app
> EcoStruxure™ Facility Expert
> EcoStruxure™ Facility Advisor
> EcoStruxure™ Power Monitoring Expert
> EcoStruxure™ Power SCADA Operation
> Any power management system with Modbus TCP protocol

Architecture overview

Ethernet has become the universal link between switchboards, computers and communicating devices inside buildings. The large amount of information which can be transferred makes the connection of Enerlin'X digital system to hosted web services of Schneider Electric a reality.

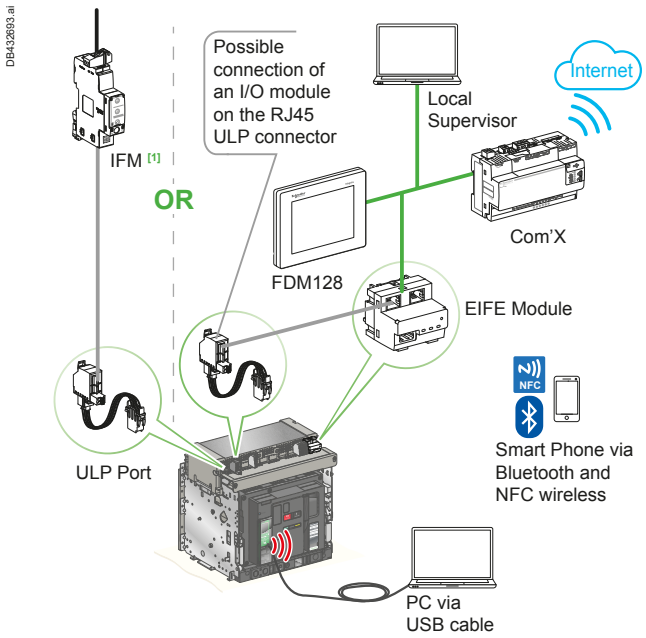

Drawout circuit breaker

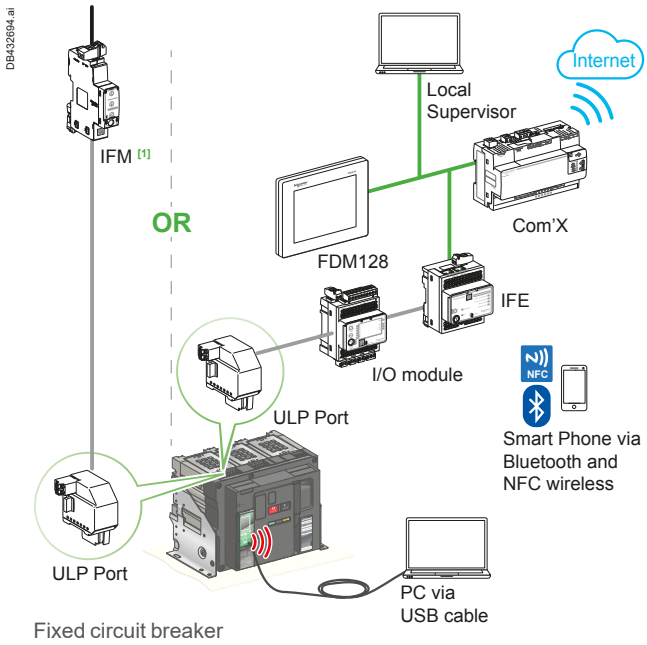

Fixed circuit breaker

Ethernet
ULP
Modbus SL
Internet
Wireless proprietary connectivity

[1] Connection to a Modbus Network through a IFM interface.

General architecture

MicroLogic X control units with its interfaces offer the following communication channels:

- Connection to an Ethernet network through either an EIFE or IFE interface module. The EIFE and IFE modules are connected to the MicroLogic X control unit by means of a ULP port and a prefabricated ULP cord. The EIFE is dedicated to drawout circuit breakers. The IFE is dedicated to fixed circuit breakers.
- Connection to a Modbus SL RS 485 bus through an IFM interface module. The IFM module is connected to the MicroLogic X control unit by means of a ULP port and a prefabricated ULP cord
- Communication with a smartphone via a wireless powered Bluetooth channel or a wireless powerless NFC channel.
- Communication with a PC via a USB port.
- Connection to Internet. The connection to Internet can be performed through a Com'X module connected to internal Ethernet network.

In addition MicroLogic X offers a wireless proprietary connectivity interface for communication with a Com'X module.

To improve the capabilities of monitoring and control, one or two I/O modules connected to the ULP bus can be associated to IFE, EIFE, and IFM modules.

The EIFE is designed to monitor the three positions of the circuit breaker when inserted in its chassis:

- Circuit breaker racked IN (CE contact),
- Circuit breaker racked OUT (CD contact),
- Circuit breaker in test position (CT contact),
- No additional I/O module is required to monitor these three positions.

The connection of an FDM 128 display unit on the Ethernet internal bus is possible for any configuration.

The following control orders, information and data, are made available on Ethernet and Modbus SL:

- Control orders:
  - MX diag&com opening voltage release control
  - XF diag&com closing voltage release control
- Events:
  - All the events logged in the event histories of MicroLogic X
- Status indications:
  - ON/OFF (0/F)
  - Spring charged CH
  - Ready to close
  - Fault trip SDE
  - Connected / disconnected / test position CE/CD/CT
- Measurements
  - Instantaneous measurement information
  - Averaged measurement information
  - Maximeter / minimeter
  - Energy metering
  - Power quality...
- Operating assistance:
  - Protection settings and alarm
  - Histories
  - Maintenance indicators
- Availability:
  - access control by password like existing offer. To be initialized by the user.

Architecture overview

A MicroLogic X control unit can be easily incorporated in Enerlin'X digital system by means of EIFE and IFE interface modules. Enerlin'X provides a simple and reliable link to local LCD displays and expert applications over Ethernet. It makes available on Ethernet most of the information collected in the circuit breakers and other electrical devices installed in a low voltage switchboard: Status, measurements, counters and alarms etc.

System Security

Operational security is an important concern for electrical installations when it comes to local and remote interaction.
Confidentiality, integrity and availability (also known as the AIC triangle) is a model designed to guide policies for information security within an organization and these elements are considered as the three crucial components of security.

In this context, confidentiality is a set of rules that limits access information (equivalent to privacy), integrity is the assurance that the information is trustworthy and accurate, and availability is a guarantee of reliable access to the information by authorized people.

Bluetooth Smart connectivity

MicroLogic X control units are equipped with Bluetooth 4.0 Smart wireless communication which allows to establish a connection with a smartphone equipped with the same technology. Bluetooth Smart complies with the IEEE 802.15.1 standard.

NFC connectivity

MicroLogic X control units are equipped with a near field communication (NFC) which allows data exchange with a smartphone equipped with the same technology and follow the standard ISO/IEC 15693-3.

Proprietary connectivity

MicroLogic X control unit are natively equipped with a proprietary connectivity means based on IEEE 802.15.4 standard which allows a connection with a Com'X module.

ULP connectivity

ULP is a fast communication link dedicated to circuit breaker monitoring and control. It connects the circuit breaker to an Ethernet interface or to an I/O module.
ULP operates at a speed of 1 Mb/s and is plug & play.

Ethernet connectivity

Ethernet is a data link and physical layer protocol complying with the IEEE 802.3 standard. It operates at a speed of 10, 100 or 1000 Mbps. The maximum length of Ethernet cable between two devices is 100 meters.
IFE and EIFE Ethernet interfaces can be connected to a PC, a laptop or a PLC over Ethernet.
IFE Ethernet switchboard server provides a Modbus TCP/IP gateway over Ethernet to enable Modbus TCP communication from a Modbus TCP master to any Modbus slave devices connected to it. The maximum active Modbus TCP client connection is twelve.
IFE and EIFE Ethernet interfaces have an embedded web server (web page).

Modbus connectivity

Modbus SL is a communication protocol widely used in industrial networks.
It operates according to a “master-slave” mode. The slaves communicate one at a time with the master. This is an RS 485 open bus on which communicating Modbus devices are connected. All types of PLCs and microcomputers may be connected on to the bus.
The maximum number of devices that may be connected to a bus depends on the type of devices, the baud rate (19200 is recommended), the volume of data exchanged, and the expected response time. The RS 485 physical layer offers up to 32 connection points on the bus (1 master, 31 slaves).
The maximum recommended length for the Modbus SL bus is 1200 meters.

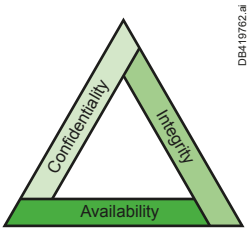

Confidentiality

- Bluetooth Smart: Wireless Encrypted (AES-128) communication (IEEE 802.15.1)
- Proprietary connectivity: Wireless encrypted (AES-128) internal communication (IEEE 802.15.4)
- NFC: operates in very short range (few centimeters)
- Compliant with NIST 800-121 concerning pairing method and encryption.

Integrity

- Only Schneider Electric firmwares can be installed in the MicroLogic X control unit
- Only Schneider Electric digital modules can be installed in the MicroLogic X control unit.

Availability

- Access control done by password. To be initialized by the user to change the default values.
- Restricted USB usage for communication profile only (no mass storage).

Architecture overview

Smart Panels
Enerlin'X

example of digitized switchboard architecture

DB432695.ai

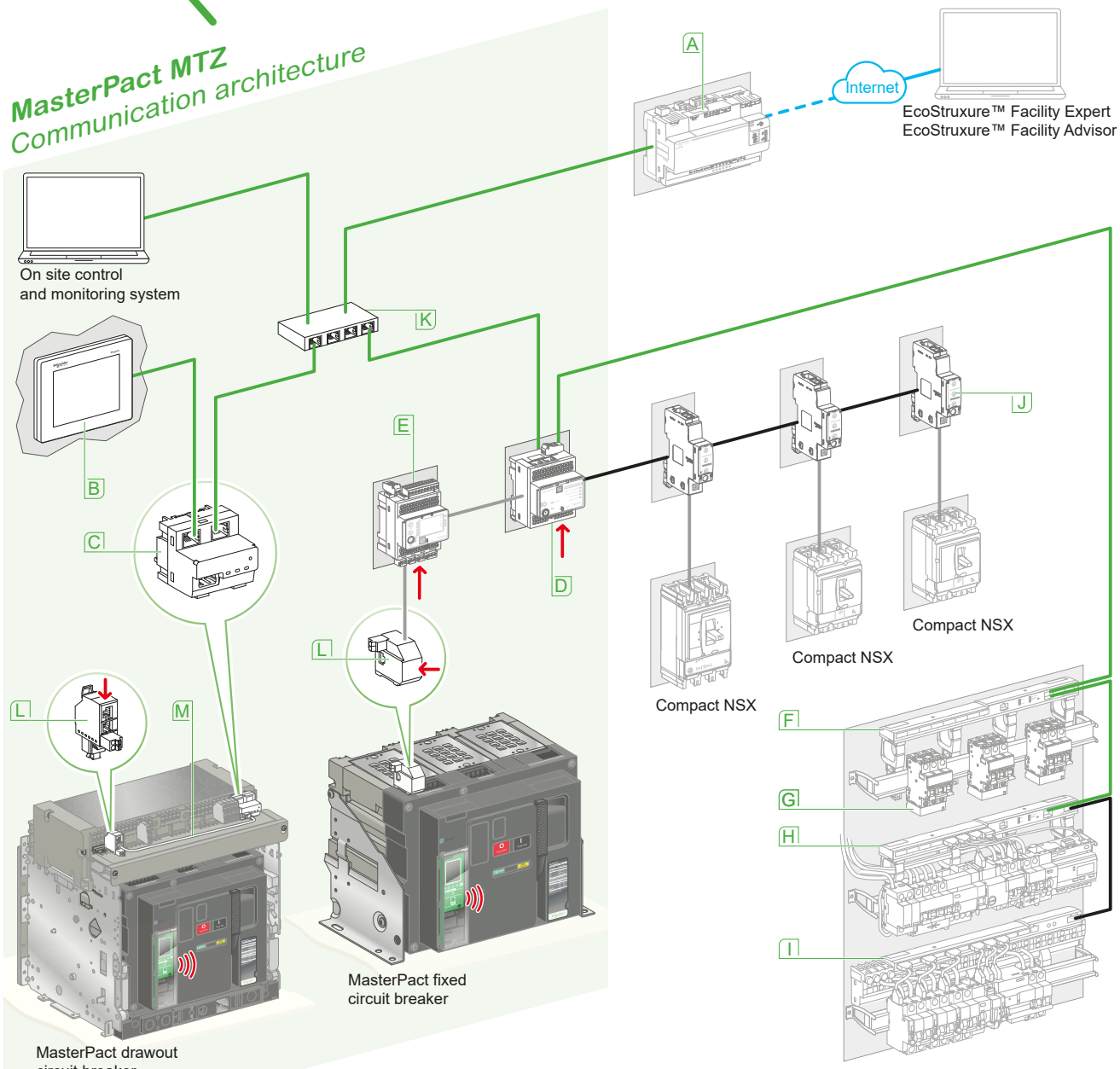

ULP is a fast communication link dedicated to circuit breaker monitoring and control

- 24 V DC
- Ethernet
- Modbus SL
- ULP
- Internet
- Wireless proprietary connectivity

Note: For every MasterPact MTZ the 24 V DC supply of all the associated interface modules (ULP port, IFE, IFM, I/O) must be delivered from the same 24 V DC power supply.

- A Com'X
- B FDM128
- C EIFE
- D IFE
- E I/O
- F Acti9 Smartlink SIB Ethernet
- G PowerTag with radio frequency communication
- H Acti9 Smartlink Ethernet
- I Acti9 Smartlink Modbus
- J IFM
- K Switch
- L ULP port
- M ULP cord

Architecture overview

Enerlin'X digital devices for MasterPact connection and monitoring

	Name	Function	Protocol		Bin. Input	Analog. Input	Bin. Output	Cat. No.
			(to device)	(to server)				
A 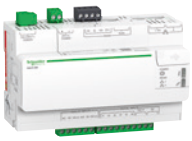	Com'X 210	Energy data logger + Ethernet Gateway	Ethernet Modbus Master, Zigbee (to wireless meters)	Ethernet cable + WiFi	6 binary	2 analog	-	**EBX210**
	Com'X 510 24 V DC + PoE	Energy server + Ethernet Gateway						**EBX510**
B	FDM128	Ethernet LCD colour touch display	Modbus TCP/IP	-	-	-	-	**LV434128**
C	EIFE	Embedded Ethernet interface [2]	ULP	Modbus TCP/IP	-	-	-	**LV851001**
D	IFE switchboard server	Ethernet interface [2] & Gateway	ULP Modbus SL & TCP/IP	Modbus TCP/IP	-	-	-	**LV434002**
	IFE interface	Ethernet interface for circuit breakers	ULP	Modbus TCP/IP	-	-	-	**LV434001**
J	IFM interface	Modbus interface for circuit breakers	ULP	Modbus SL	-	-	-	**LV434000**
E	I/O	Input/Output application module for circuit breaker	ULP	-	6	1	3	**LV434063**

Ethernet Gateway or Interface: routes an internal traffic (ULP or other protocole) to the Internet, the outgoing messages are coded with Modbus TCPIP protocol.

Server (Switchboard, Energy): routes the internal traffic to the Internet. Other complementary functions such as data logging and storage. Provides devices status and energy trends on internal web pages...

Note: for more information please consult: Configuration & commissioning guide of connected devices & software - New buildings

Architecture overview

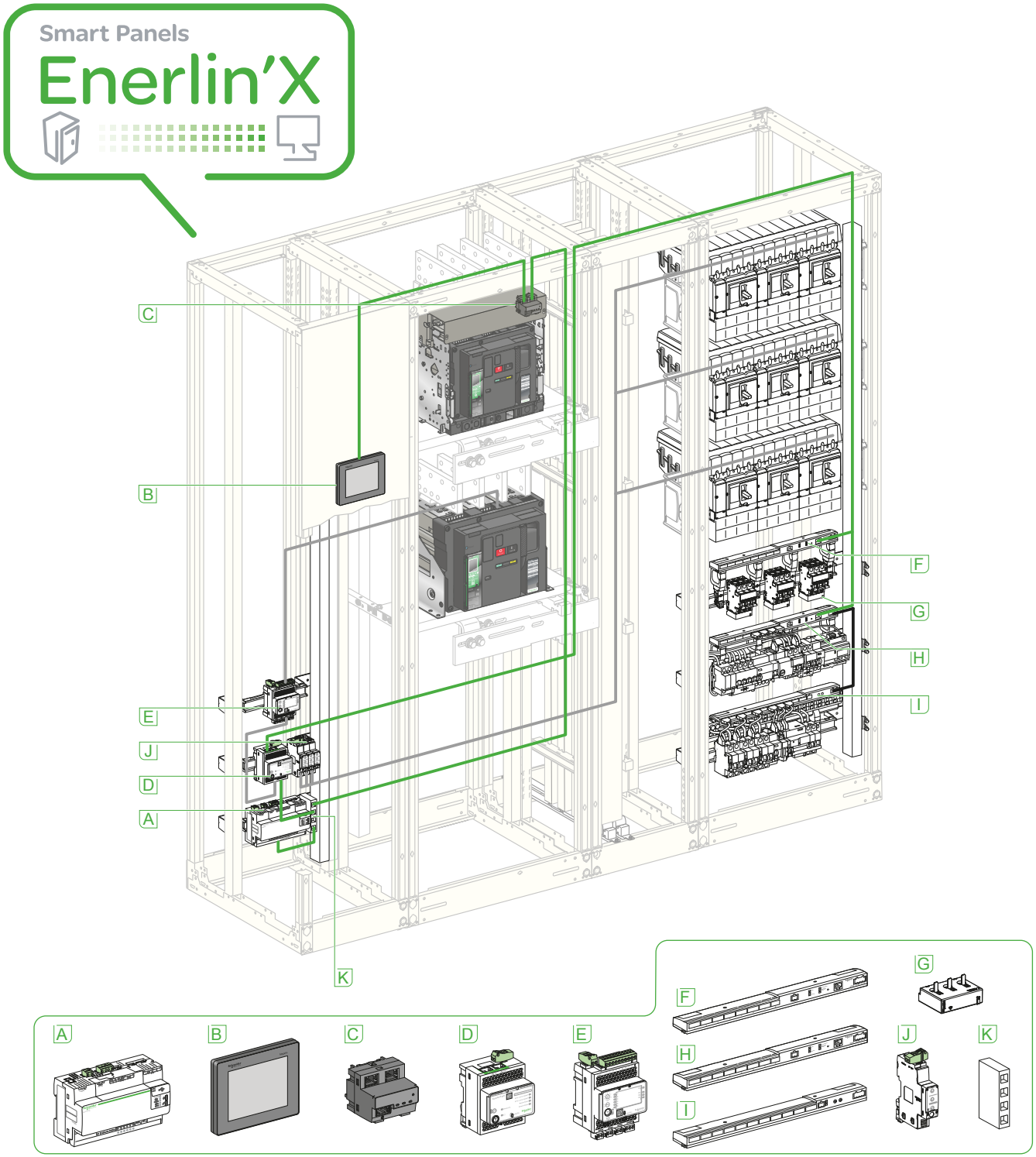

Ethernet
Modbus SL
ULP

- A Com'X
- B FDM128
- C EIFE
- D IFE
- E I/O
- F Acti9 Smartlink SIB Ethernet
- G PowerTag with radio frequency communication
- H Acti9 Smartlink Ethernet
- I Acti9 Smartlink Modbus
- J IFM
- K Switch

Breaker ULP cord:
- 0.3 m
- 1.3 m
- 3 m
- 5 m

ULP cable:
- 0.3 m
- 0.6 m
- 1 m
- 3 m
- 5 m

Life Is On Schneider Electric

Architecture overview

ULP Wiring system
The wiring system is designed for low-voltage power switchboards. Installation requires no tools or special skills. The prefabricated wiring ensures both data transmission and power supply for the communications modules associated with MicroLogic X control units.

Communication architecture

MTZ Drawout circuit breaker

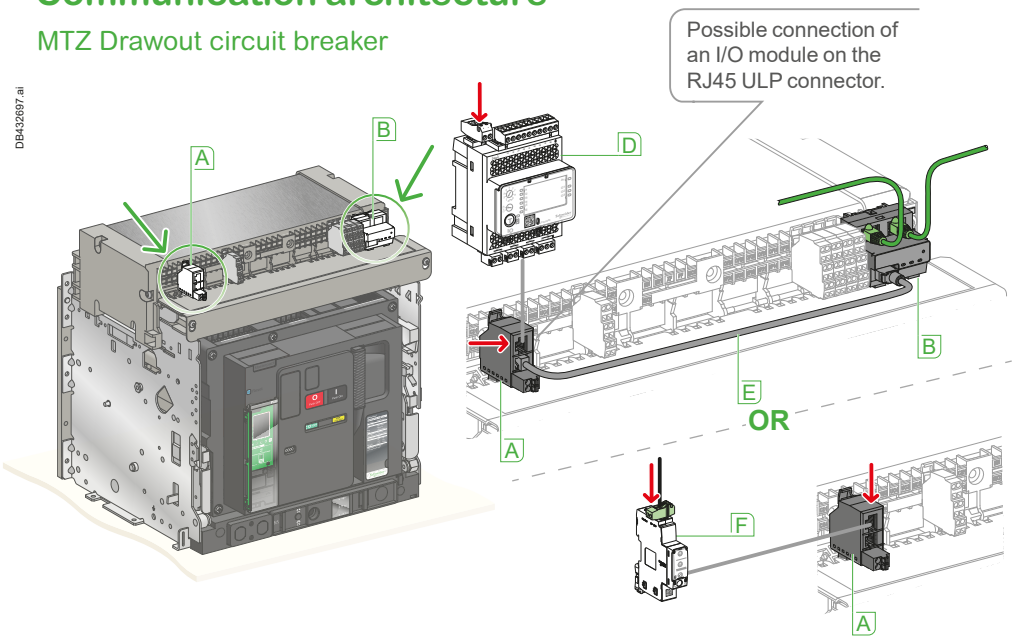

MTZ Fixed circuit breaker without I/O module

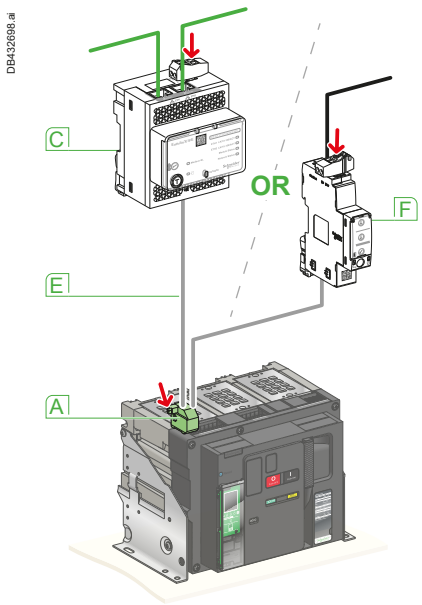

MTZ Fixed circuit breaker with additional I/O module

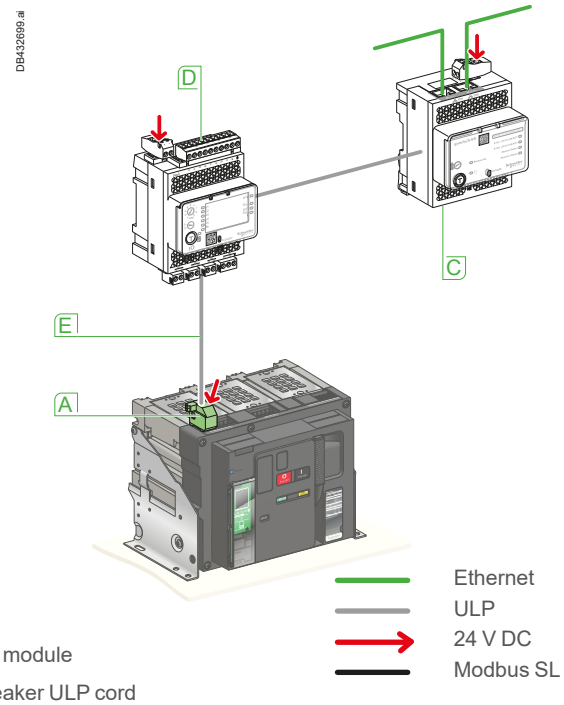

A ULP port
B EIFE communiation module
C IFE communiation module
D I/O module
E Breaker ULP cord
F IFM interface

Note: For every MasterPact MTZ the 24 V DC supply of all the associated interface modules (ULP port, IFE, IFM, I/O) must be delivered from the same 24 V DC power supply.

ULP system

ULP system is a fast communication link dedicated to circuit breaker monitoring and control.
It is well adapted to severe environments.
A choice of preconized cables with different lengths is provided for the connection of ULP port to EIFE, IFE and I/O module.

EIFE / IFE interfaces

EIFE/IFE interfaces provide an IP address to any circuit breaker fitted with a ULP port.
The EIFE / IFE interfaces make all available data from the circuit breaker accessible from an Ethernet compatible display (FDM128), a PC with common browser, or a Modbus TCP/IP client.
EIFE / IFE interfaces generate their own web pages.

I/O application module

I/O is dedicated to circuit breakers with ULP link.
It may ensure:
- the control of the circuit breaker
- the control of applications around the circuit breaker: cooling system, load control, lighting and pulse metering acquisition.

E

Components

ULP interface module

In the new generation of MasterPact MTZ circuit breakers, an internal communication protocol (ULP port) is systematically embedded in the MicroLogic X control unit (no longer a need for BCM module as in previous generations), as well as the microswitch contacts to obtain complementary circuit breaker status information (OF, SDE, PF, CH).

MasterPact MTZ Fixed circuit breaker

DB421308.ai

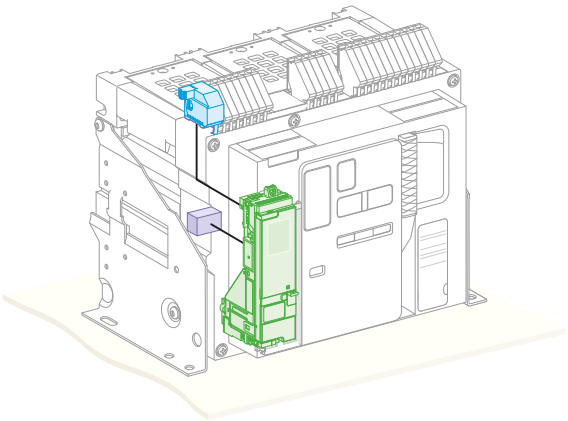

MasterPact MTZ Drawout circuit breaker

DB421309.ai

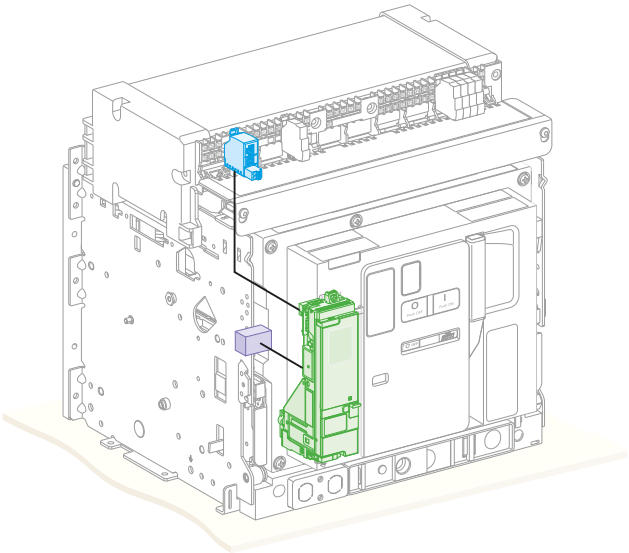

- MicroLogic X
- ULP port
- Microswitch contact (OF, SDE, PF, CH)

Note: Reminder: MasterPact MTZ Switch Disconnector ranges (HA, NA) have no communication capabilities. They are not compatible with any communication architecture.

Components

ULP interface module

Depending on the type of the device (MasterPact MTZ1, MTZ2, MTZ3, fixed or drawout version), the ULP port and its corresponding wiring kit is supplied as standard or as an option as shown in the following chart :

ULP port versions

MTZ1/2/3 fixed

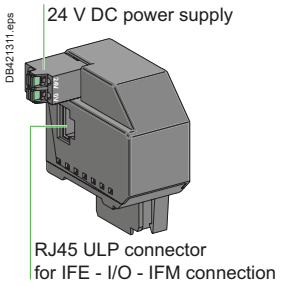

Optional

MTZ1 Drowout

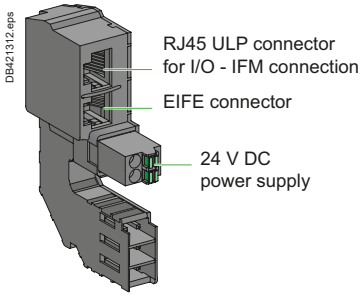

Optional

MTZ2/3 Drowout

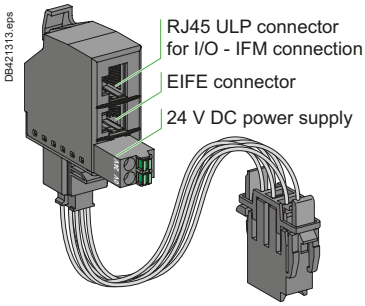

Standard

ULP port generalities

The targets of the ULP port are:

- to interconnect the MicroLogic X with EIFE, IFE, IFM and I/O module.
- to supply power to the trip unit and the EIFE module.
- to integrate the ULP bus line termination.

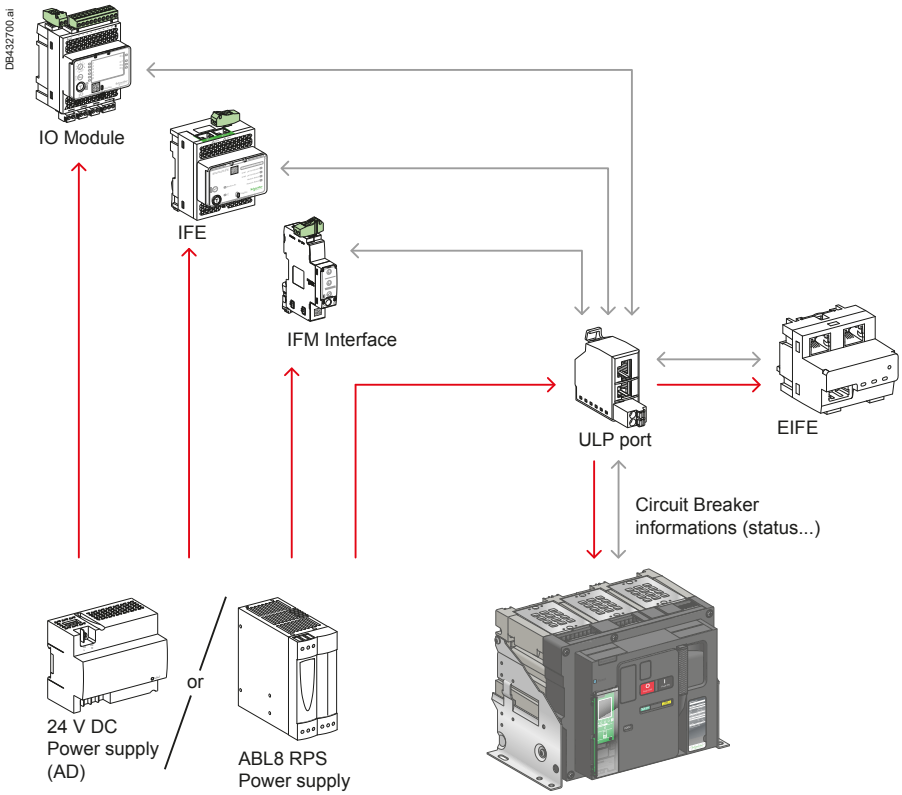

Note:

- Possible connection of an I/O module on the RJ45 ULP connector.
- When the ULP port is installed the 24 V DC power supply shall be disconnected from the terminals F1/F2 of the control unit.
- The connection of the +/- of the power supply either on terminals F1/F2 of MicroLogic X or on the +/- terminals of the ULP port must be strictly respected. Crossing the polarities may damage the device.
- For every MasterPact MTZ the 24 V DC supply of all the associated interface modules (ULP port, IFE, IFM, I/O) must be delivered from the same 24 V DC power supply.

Information data

24 V DC power supply

Components
EIFE embedded Ethernet interface

PB115959_36.eps

EIFE embedded Ethernet interface

E

EIFE embedded Ethernet interface description

Introduction
The EIFE embedded Ethernet interface module enables drawout MasterPact MTZ circuit breakers to be connected to an Ethernet network.
It provides a digital access to all the data delivered by the MasterPact control unit MicroLogic X. In addition it monitors the three positions of the circuit breaker when inserted in its chassis:
- Circuit breaker racked IN,
- Circuit breaker racked OUT,
- Circuit breaker in test position.

EIFE becomes then the best solution for high uptime demanding switchboards.

EIFE interface: ref. LV851001
Provides an Ethernet access to a single drawout MasterPact MTZ circuit breaker.

Function
One circuit breaker is connected to the EIFE interface via its ULP port.

EIFE interface features
- Dual 10/100 Mbps Ethernet port for simple daisy chain connection.
- Device profile web service for discovery of the EIFE interface on the LAN.
- Ethernet interface for drawout MasterPact circuit breakers.
- Embedded set-up web pages.
- Embedded monitoring web pages.
- Embedded control web pages.
- Chassis status management (CE, CD, CT)
- Built-in e-mail alarm notification
- RBAC (Role Base Access Control).
- RSTP (Rapid Scanning Tree Protocol) is a solution to implement redundant Ethernet networks.

Mounting
The EIFE interface is mounted on the chassis of the Drawout circuit breaker.
There are two types of dedicated ULP cable, one for the MTZ1 and one for MTZ2/MTZ3.

24 V DC power supply
The EIFE power supply is provided by the ULP port through the dedicated ULP cable.

EIFE interface firmware update
The firmware can be updated using EcoStruxure Power Commission software.

Required circuit breaker communication accessory
The connection to EIFE interface requires a ULP communication port on the chassis of the drawout MasterPact MTZ circuit breakers.

DB421474.ai

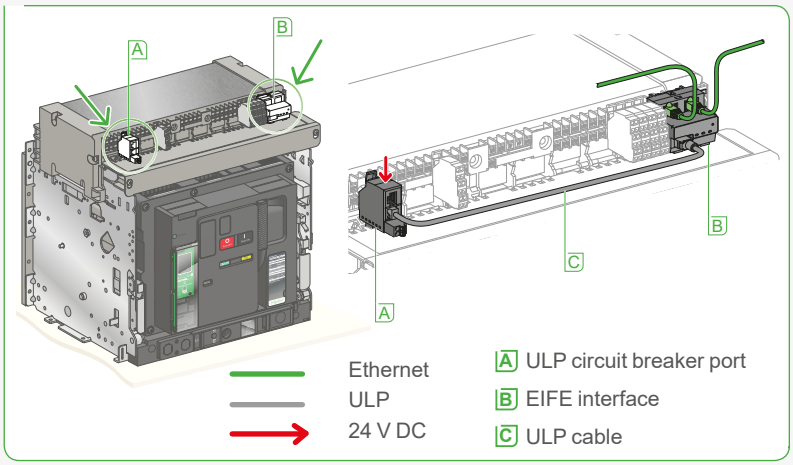

EIFE mounting and cabling

Components

EIFE embedded Ethernet interface

General characteristics		
Environmental characteristics		
Conforming to standards		IEC 60950, IEC 60947-6-2, UL 508, UL 60950, IACS E10
Certification		c UL us, CE, EAC, FCC marking
Ambient temperature	storage	-40 to +85 °C
	operation	-25 to +70 °C
Relative humidity		5 - 85 %
Level of pollution		Level 3
Protective treatment		ULV0 conforming to IEC/EN 60068-2-30
Mechanical characteristics		
Shock resistance Resistance to sinusoidal vibrations		As the EIFE is mounted on the circuit breaker it complies with its mechanical characteristics
Electrical characteristics		
Consumption		100 mA at 24 V DC
Resistance to electrostatic discharge		IEC/EN 61000-4-2: ■ 8 kV air discharge ■ 6 kV contact discharge
Immunity to radiated fields		IEC/EN 61000-4-3: 20 V/m
Immunity to fast transient perturbations		IEC/EN 61000-4-4: 2 kV
Immunity to surges		IEC/EN 61000-4-5: 2 kV common mode
Immunity to conducted radio frequency field		IEC/EN 61000-4-6: 10 V
Physical characteristics		
Dimensions		51 x 51 x 52.5 mm
Mounting		Breaker DIN rail of MTZ1 & MTZ2/MTZ3
Weight		75 g EIFE alone
Degree of protection of the installed module		■ IP20 for connectors ■ IP30 for other areas
Connections		■ RJ45 for Ethernet ■ Industrial USB connector for ULP

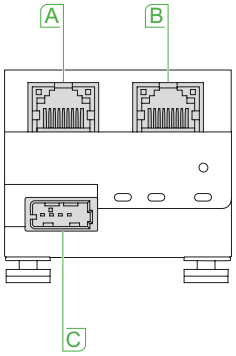

A Ethernet port 1.
B Ethernet port 2.
C ULP port.

EIFE web page description

Monitoring web page:
- Real time data
- Device logging.

Control web page:
- Single device control.

Diagnostics web page:
- Statistics
- Device information
- IMU information
- Read device registers
- Communication check.

Maintenance web page:
- Circuit breaker heath status
- Maintenance log
- Maintenance counters

Setup web page:
- Device localization/name
- Ethernet configuration (dual port)
- IP configuration
- Modbus TCP/IP filtering
- Date and time
- E-mail server configuration
- Alarms to be e-mailed
- Device logging
- Device log export
- SNMP parameters
- Preferences
- Advanced services control
- User accounts
- Web page access.

Components
IFE Ethernet interface

PB115652.eps

IFE interface, ref.: LV434001

PB119096.eps

IFE switchboard server, ref.: LV434002

E

IFE interface, IFE switchboard server description

Introduction
The IFE interface and the IFE switchboard server enable LV circuit breakers to be connected to an Ethernet network. The IFE switchboard server incorporates a Modbus gateway. The IFE interface and IFE switchboard server are both equipped with two ULP ports and two Ethernet ports. The IFE switchboard server is equipped with a Modbus RS 485 serial connection. The following circuit breakers can be connected to IFE interface and to IFE switchboard server: Fixed type MasterPact MTZ, ComPact NSX or PowerPact.

IFE interface: ref. LV434001
Provides an Ethernet access to a single LV circuit breaker. The circuit breaker is connected to the IFE interface via its ULP port and a prefabricated ULP cord [1].

IFE switchboard server: ref. LV434002
Provides an Ethernet access to one or several LV circuit breakers. It allows to interface to Ethernet:
- One single circuit breaker connected to the IFE interface via its ULP port and a prefabricated ULP cord,
- Up to 12 ComPact NSX connected through the Modbus serial line interface.

Each ComPact NSX is connected to Modbus by means of a dedicated IFM interface module performing the ULP/Modbus conversion.
The connection between each ComPact NSX and its associated IFM interface is realized by a prefabricated ULP cord connected to ULP ports.

IFE interface, IFE switchboard server
- Dual 10/100 Mbps Ethernet port for simple daisy chain connection.
- Device profile web service for discovery of the IFE interface and IFE switchboard server on the LAN.
- ULP compliant for localization of the IFE interface in the switchboard.
- Ethernet interface for MasterPact, ComPact and PowerPact circuit breakers.
- Gateway for Modbus-SL connected devices (IFE switchboard server only).
- Embedded set-up web pages.
- Embedded monitoring web pages.
- Embedded control web pages.
- Built-in e-mail alarm notification.
- Internal real-time clock with battery back-up.
- RBAC (Role Base Access Control) for the embedded control web pages.
- RSTP (Rapid Scanning Tree Protocol) is a solution to implement redundant Ethernet networks.

Mounting
The IFE interface and the IFE switchboard server are DIN rail mounting devices.
A stacking accessory enables the user to connect several IFMs (ULP to Modbus serial line interfaces) to an IFE switchboard server without additional wiring.

24 V DC power supply
The IFE interface and the IFE switchboard server must be supplied either with a 24 V DC AD or with a 24 V DC ABL8 RPS power supply.
The IFMs stacked to an IFE switchboard server are supplied by the IFE, thus it is not necessary to supply them separately.

Note: The connection of the +/- of the power supply on +/- terminals of the IFE device must be strictly respected. Crossing the polarities may damage the device.

IFE interface, IFE switchboard server firmware update
The firmware can be updated using the EcoStruxure Power Commission software.

Required circuit breaker communication modules
The connection to IFE interface or to IFE switchboard server requires ULP communication ports. Every MasterPact MTZ, fixed type circuit breakers is equipped with a ULP port connected to its associated IFE Ethernet interface module by a prefabricated ULP cord. The IFE Ethernet interface modules are equipped with two ULP RJ45 connectors.When one is not used, it must be closed with a ULP terminator.

Components

IFE Ethernet interface

General characteristics		
Environmental characteristics		
Conforming to standards		IEC 60950, IEC 60947-6-2, UL 508, UL 60950, IACS E10
Certification		c UL us, CE, EAC, FCC marking
Ambient temperature	storage	-40 to +85 °C
	operation	-25 to +70 °C
Relative humidity		5 - 85 %
Level of pollution		Level 3
Protective treatment		ULV0 conforming to IEC/EN 60068-2-30
Mechanical characteristics		
Shock resistance		Conforming to IEC/EN 60068-2-27 15 g / 11 ms, 1/2 sinusoidal
Resistance to sinusoidal vibrations		Conforming to IEC/EN 60068-2-6 5 Hz < f < 8.4 Hz
Electrical characteristics		
Consumption		150 mA at 24 V DC
Resistance to electrostatic discharge		IEC/EN 61000-4-2: ■ 8 kV air discharge ■ 6 kV contact discharge
Immunity to radiated fields		IEC/EN 61000-4-3: 10 V/m
Immunity to fast transient perturbations		IEC/EN 61000-4-4: 2 kV
Immunity to surges		IEC/EN 61000-4-5: 2 kV common mode
Immunity to conducted radio frequency field		IEC/EN 61000-4-6: 10 V
Physical characteristics		
Dimensions		72 x 105 x 71 mm
Mounting		DIN rail
Weight		182.5 g (0.41 lb)
Degree of protection of the installed I/O		■ On the front panel (wall mounted enclosure): IP4x ■ Connectors: IP2x ■ Other parts: IP3x
Connections		Screw type terminal blocks

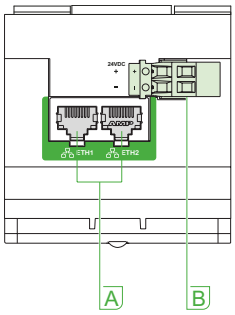

DB419230.eps

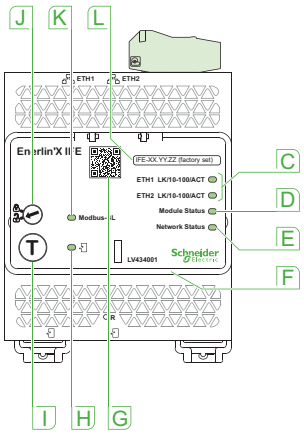

DB425732.eps

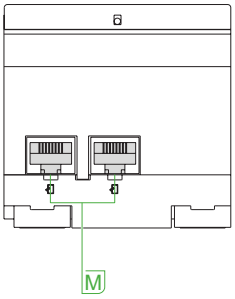

DB425733.eps

A Ethernet 1 and Ethernet 2 communication port.
B 24 V DC power supply terminal block.
C Ethernet communication LEDs:
yellow: 10 Mb
green: 100 Mb.
D Module status LED:
steady off: no power
steady green: device operational
steady red: major fault
flashing green: standby
flashing red: minor fault
flashing green/red: self-test.
E Network status LED:
steady off: no power/no valid IP address
steady green: connected, valid IP address
steady orange: default IP address
steady red: duplicated IP address
flashing green/red: self-test.
F Sealable transparent cover.
G QR code to product information.
H ULP status LED.
I Test button (accessible with cover closed).
J Locking pad.
K Modbus traffic status LED (LV434002 only).
L Device name label.
M ULP ports.

IFE web page description

Monitoring web page:
- Real time data
- Device logging.

Control web page:
- Single device control.

Diagnostics web page:
- Statistics
- Device information
- IMU information
- Read device registers
- Communication check.

Maintenance web page:
- Circuit breaker health status
- Maintenance log
- Maintenance counters.

- **Setup web page:**
- Device localization/name
- Ethernet configuration (dual port)
- IP configuration
- Modbus TCP/IP filtering
- Date and time
- E-mail server configuration
- Alarms to be e-mailed
- Device logging
- Device log export
- SNMP parameters
- Preferences
- Advanced services control
- User accounts
- Web page access.

Components
IFM Modbus interface

PB119111.eps

IFM Modbus communication interface.
Ref.: LV434000.

DB425796.eps

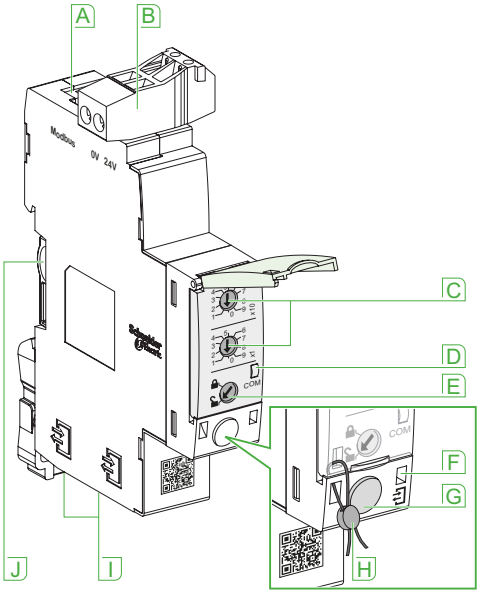

A Modbus Serial RJ45 port.
B 0-24 V DC power supply.
C Modbus address switches.
D Modbus traffic LED
E Modbus locking pad.
F ULP activity LED.
G Test button.
H Mechanical lock and locking seal.
I ULP RJ45 connectors.
J Stacking accessory connection

Function

IFM - Modbus communication interface - is required for connecting MasterPact MTZ, NT/NW or ComPact NS and NSX to Modbus network whenever the circuit breaker has an ULP port (Universal Logic Plug). The port is available on BCM ULP for MasterPact range and BSCM module for ComPact range.
Note: IFM is defined as an IMU (Intelligent Modular Unit) within the ULP connection System documentation.

Once connected to IFM, the circuit breaker is considered as a slave by the Modbus master. Its electrical values, alarm status, open/close signals car be monitored or controlled by a Programmable Logic Controller or any other system.

Characteristics

ULP port
2 RJ45 sockets, internal parallel wiring.
- Connection of a single circuit breaker.
- An ULP line terminator must be connected to the second RJ45 ULP socket.

The RJ45 sockets deliver a 24 V DC supply fed from the Modbus socket.
Built-in test function, for checking the correct connection to the circuit breaker.

Modbus slave port
- Modbus Serial RJ45 port - RJ45 connector provides fast and reliable wiring.
- Lateral socket, for DIN rail stackable connector.
- Both top and lateral sockets are internally parallel wired.
- Multiple IFM can be stacked, thus sharing a common power supply and Modbus line without individual wiring.
- On the front face:
  - Modbus address setting (1 to 99): 2 coded rotary switches
  - Modbus locking pad: enables or disable the circuit breaker remote control and modification of IFM parameters.
- Self adjusting communication format (Baud rate, parity).

24 V DC power supply
- Screw clamp terminal block
- High electrical insulation between Modbus and 24 V DC connectors
- Separated lines provides improved communication robustness.

General characteristics	
Environmental Characteristics	
Conforming to standards	IEC 61010, IEC 60950, UL 61010, UL 60950, CISPRR 22, 24, 11, IACS E10
Certification	c UL us, CE, EAC, FCC marking
Ambient temperature	-20 to +70 °C
Relative humidity	5 - 85 %
Level of pollution	Level 3
Protective treatement	ULV0 conforming to IEC/EN 60068-2-30
Mechanical characteristics	
Shock resistance	Conforming to IEC/EN 60068-2-27 15 g / 11 ms, 1/2 sinusoidal
Resistance to sinusoidal vibrations	Conforming to IEC/EN 60068-2-6 5 Hz < f < 8.4 Hz
Electrical characteristics	
Consumption	30 mA at 24 V DC
Resistance to electrostatic discharge	IEC/EN 61000-4-2: 8 kV AD
Immunity to radiated fields	IEC/EN 61000-4-3: 10 V/m
Immunity to surges	IEC/EN 61000-4-5: class 2
Physical characteristics	
Dimensions	109 x 73 x 18 mm
Mounting	DIN rail
Weight	120 g
Degree of protection of the installed module	■ IP20 for connectors ■ IP30 for other areas
Connections	■ RJ45 for ULP and Modbus SL ■ Screw type terminals for Power

Recommended IFM installation

Stacking IFM

DB425861.ai

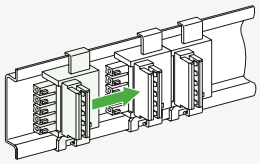

Stacking accessories

DB425813.cps

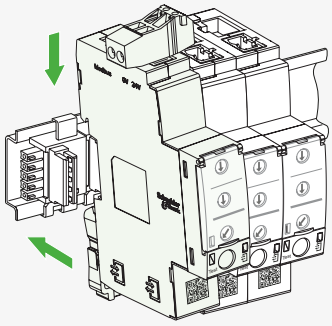

Up to 12 stacked IFM

Stacking an IFE switchboard server with IFMs

DB425811.eps

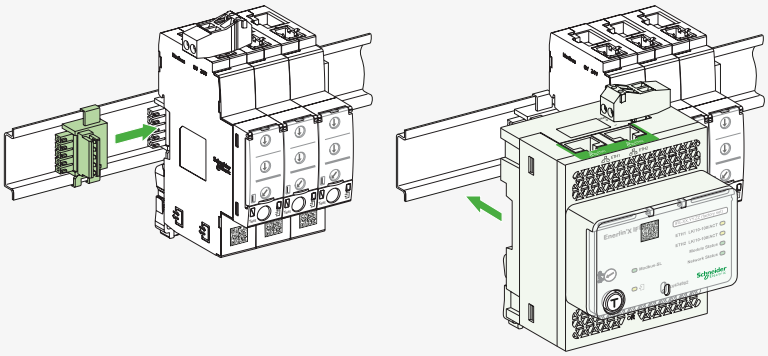

Components
I/O Application module

PB119234.eps

I/O application module

E

DB419578.eps

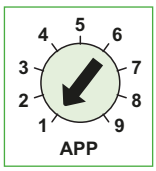

DB419579.eps

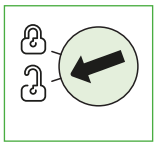

DB419580.eps

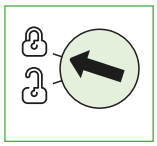

I/O application module description

Description

The I/O input/output application module for LV breaker is one of the components of ULP architecture. Built in functionalities and applications enhance control and monitoring needs.
ULP system architecture including I/O modules can be built without any restrictions using a wide range of circuit breakers:

- MasterPact MTZ1/MTZ2/MTZ3/NT/NW,
- ComPact NS1600b-3200,
- ComPact NS630b-1600,
- ComPact NSX100-630 A.

The I/O application module is compliant with the ULP system specifications.
Two I/O application modules can be connected in the same ULP architecture.

I/O input/output interface for LV breaker resources

The I/O application module resources are the following:

- 6 digital inputs that are self powered for either NO and NC dry contact or pulse counter,
- 3 digital outputs that are bistable relay (5 A maximum),
- 1 analog input for Pt100 temperature sensor.

Pre-defined applications

Pre-defined applications improve the IMU approach (Intelligent Modular Unit) in a simple way.
A 9-position rotary switch on the front of the I/O module allows to select the pre-defined applications. Each position is assigned to a pre-defined application except position 9 which allows the user to define a specific application by means of the customer engineering tool. The switch is set in factory to the pre-defined application 1.

For each application the input/output assignment and the wiring diagram are pre-defined. No additional setting with the customer engineering tool is required. The I/O and other resources not assigned to the pre-defined applications are free for user specific applications.

User applications

The user applications with the corresponding resources are defined by means of EcoStruxure Power Commission engineering tool. They use the resources not assigned to the predefined applications. User applications may be required for:

- Protection improvement,
- Circuit breaker control,
- Motor control,
- Energy management,
- Monitoring.

24 V DC power supply

The I/O module must be supplied either with a 24 V DC AD or with a 24 V DC ABL8 RPS power supply.

Note: The connection of the +/- of the power supply on +/- terminals of the I/O module must be strictly respected. Crossing the polarities may damage the device.

Mounting

The I/O is a DIN rail mounting device.

Setting locking pad

The setting locking pad on the front panel of the I/O enables the setting of the I/O by EcoStruxure Power Commission engineering tool.

Components

I/O Application module

General characteristics

Environmental characteristics		
Conforming to standards		IEC 60950, IEC 60947-6-2, UL 508, UL 60950, IACS E10
Certification		c UL us, CE, EAC, FCC marking
Ambient temperature	storage	-40 to +85 °C
	operation	-25 to +70 °C
Relative humidity		5 - 85 %
Level of pollution		Level 3
Protective treatment		ULV0 conforming to IEC/EN 60068-2-30
Mechanical characteristics		
Shock resistance		Conforming to IEC/EN 60068-2-27 15 g / 11 ms, 1/2 sinusoidal
Resistance to sinusoidal vibrations		Conforming to IEC/EN 60068-2-6 5 Hz < f < 8.4 Hz
Electrical characteristics		
Consumption		165 mA at 24 V DC
Resistance to electrostatic discharge		IEC/EN 61000-4-2: ■ 8 kV air discharge ■ 6 kV contact discharge
Immunity to radiated fields		IEC/EN 61000-4-3: 10 V/m
Immunity to fast transient perturbations		IEC/EN 61000-4-4: 2 kV
Immunity to surges		IEC/EN 61000-4-5: 2 kV common mode
Immunity to conducted radio frequency field		IEC/EN 61000-4-6: 10 V
Physical characteristics		
Dimensions		71.7 x 116 x 70.6 mm
Mounting		DIN rail
Weight		229.5 g (0.51 lb)
Degree of protection of the installed I/O application module		On the front panel (wall mounted enclosure): IP4x I/O parts: IP3x Connectors: IP2x
Connections		Screw type terminal blocks

Digital inputs		
Digital input type	Self powered digital input with current limitations as per IEC 61131-2 type 2 standards (7 mA)	
Input limit values at state 1 (close)	19.8 - 25.2 V DC, 6.1 - 8.8 mA	
Input limit values at state 0 (open)	0 - 19.8 V DC, 0 mA	
Maximum cable length	10 m	

Note: for a length greater than 10 m and up to 300 m, it is mandatory to use a shielded twisted cable. The shield cable is connected to the I/O functional ground of the I/O application module.

Digital outputs		
Digital output type	Bistable relay	
Rated voltage	250 V AC maximum [1] / 30 V DC	
Rated carry current	5 A	
Contact resistance	30 mΩ	
Maximum operating frequency	18000 operations/hr (Mechanical) 1800 operations/hr (Electrical)	
Digital output relay protection by an external fuse	External fuse of 5 A or less	
Maximum cable length	10 m	
Analog inputs		
I/O application module analog input can be connected to a Pt100 temperature sensor.		
Range	-30 to 200 °C	-22 to 392 °F
Accuracy	±2 °C from -30 to 20 °C ±1 °C from 20 to 140 °C ±2 °C from 140 to 200 °C	±3.6 °F from -22 to 68 °F ±1.8 °F from 68 to 284 °F ±3.6 °F from 284 to 392 °F
Refresh interval	5 s	5 s

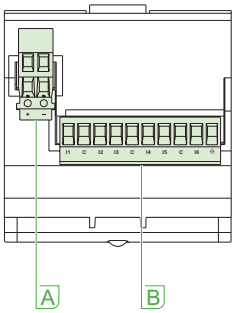

DB419233.eps

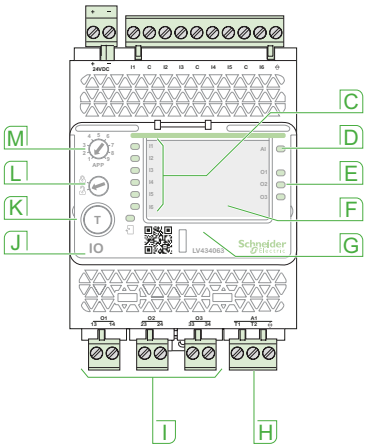

DB432536.eps

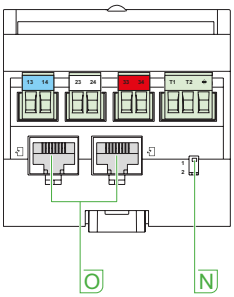

DB419235.eps

A 24 V DC power supply terminal block.
B Digital input terminal block: 6 inputs, 3 commons and 1 shield.
C 6 input status LEDs.
D Analog input status LED.
E 3 output status LEDs.
F I/O application module identification labels.
G Sealable transparent cover.
H Analog input terminal block.
I Digital output terminal blocks.
J ULP status LED.
K Test/reset button (accessible with cover closed).
L Setting locking pad.
M Application rotary switch: 1 to 9.
N Switch for I/O addressing (I/O 1 or I/O 2).
O ULP connectors.

[1] 250 V AC OVC 2 according IEC/EN 60947-2 . For OVC 3 and 4 surge arresters are required on the polarizing voltage of the output contacts.

Architecture components

FDM128 Display Unit

MicroLogic X measurement capabilities come into full play with the FDM128 switchboard display. It connects to Ethernet communication via RJ45 port and displays MicroLogic X information.

PB111806.eps

FDM128 display.

DB421324.ai

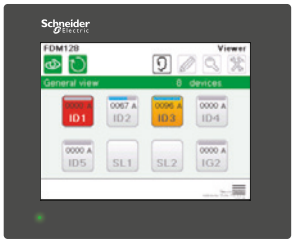

General view

DB421325.ai

Role base access control

DB421326.ai

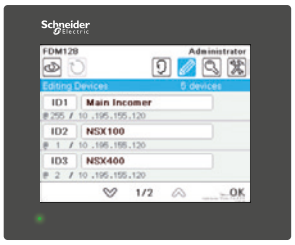

Editing devices

DB421327.ai

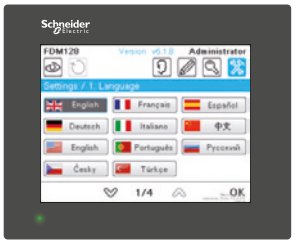

General setting

FDM128 switchboard display

The FDM128 is an intelligent Ethernet touch screen. It collects the data from devices via Ethernet network. It is designed to manage up to 8 devices such as:

- MasterPact MTZ1,MTZ2, MTZ3,
- ComPact NS,
- ComPact NSX,
- Smartlink.

The FDM128 switchboard display unit can be connected to a MicroLogic X via an IFE or an EIFE interface module. It is easy to use and requires no special software or programming.

The FDM128 has a large screen. It requires very little depth. The anti-glare graphic screen has a backlight for very easy reading even under poor ambient lighting and at sharp angles.

Display of MicroLogic X measurements and trips

The FDM128 is intended to display MicroLogic X measurements, trips and operating information. It cannot be used to modify the protection settings.
Measurements are easily accessed via a menu.
Trips are automatically displayed.
A pop-up window displays the time-stamped description of the trip.

Status indications

When the circuit breaker is equipped with the Command Module, the FDM128 display can also be used to view circuit breaker status conditions:

- OF: ON/OFF
- CH: spring charged
- SDE: Fault-trip indication (overload, short-circuit, earth fault)
- CE, CD, CT chassis management with EIFE.

Remote control

When the circuit breaker is equipped with Communicating voltage releases, the FDM128 display can also be used to control the circuit breaker (Emission of open/close commands).

Main characteristics

- 115.2 x 86.4 mm with 5.7" QVGA display 320 x 240 pixels.
- Color TFT LCD, LED backlight.
- Wide viewing angle: vertical ±80°, horizontal ±70°.
- High resolution: excellent reading of graphic symbols.
- Operating temperature range -10 °C to +55 °C.
- CE / UL / CSA marking.
- 24 V DC power supply.
- Consumption ≤ 6.8 W.
- One RJ45 Ethernet jack.

Mounting and Protection

- The FDM128 is easily installed in a switchboard.
- Standard door hole Ø22 mm.
- The FDM128 degree of protection is IP65.

Architecture components

FDM128 Display Unit

Main menu

General view
Provides in one shot the information about the status of each monitored device

Role base access control
Manage logins and passwords.

Editing devices
Specify the devices monitored by the FDM128.

Communication setting
Set the communication parameters.

General setting
Select the language and to set the other parameters of FDM128.

Sub menus

Quick view
Provides access to five screens that display a summary of essential operating information (I, U, f, P, E, THD, circuit breaker On/off), protection settings.

Measures
Display all the measurements (I, U, V, f, P, Q, S, E, THD, PF) with the corresponding min/max values.

Alarms history
Display tripping and alarms histories.

Control
Display the status of the devices (Open/Closed) and to initiate control commands (Open/Close/Reset)

Maintenance
Display all circuit breaker health status indications and all the information generated by the diagnostic functions (number of operations, contact wear, operating time, internal temperature etc.)

DB421328.ai

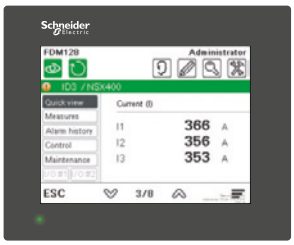

Quick view

DB421329.ai

Measures

DB421330.ai

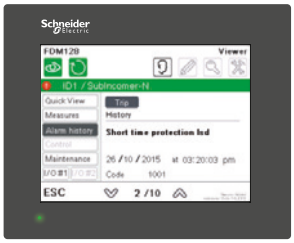

alarm history

DB421331.ai

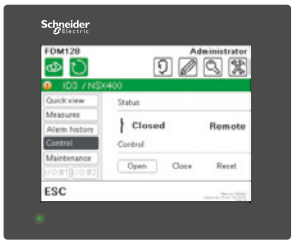

Control

DB421332_1.ai

Maintenance

E

Customer engineering tool: EcoStruxure Power Commission software

Key Features

Build

I want to test & deliver a "ready to commission" panel

- Device Discovery
- Switchboard setting & testing
- Communication Test & Reports
- Save my project & reports

Commission

I want to "shorten" my commissioning time

- Device Discovery
- Multi Device Configuration
- Communication Test & Reports
- Save my project & reports

Maintain

I want to ensure "continuity" of services in "safe conditions"

- Settings consistency check
- Device checkup
- Firmware upgrade
- Standard Diagnostic data
- Save my project & reports

EcoStruxure Power Commission Experience

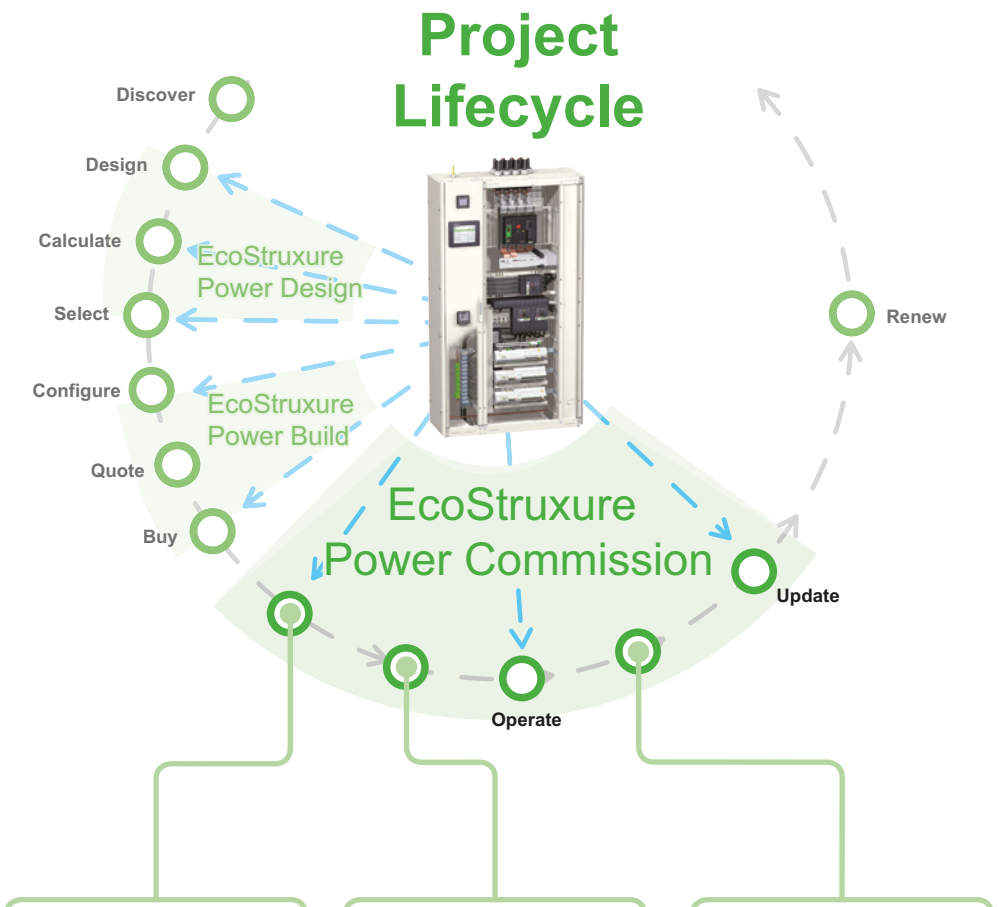

Panel builders

Simple & easy software to set up and test a panelboard

Electrical contractors & system integrator

Shorten commissioning time and speed up SAT delivery with easy-to-use software

Facility managers

Software to track installation changes & diagnostic features for preventive maintenance

Customer engineering tool: EcoStruxure Power Commission software

EcoStruxure Power Commission Software

Definition

EcoStruxure Power Commission software helps the user to manage a project as part of the testing, site commissioning, and maintenance phases of the project life cycle. With EcoStruxure Power Commission, you will get your electrical devices configured, tested and commissioned in the simplest way. EcoStruxure Power Commission drastically reduces the commissioning time of Smart Panels and supports the system during maintenance. EcoStruxure Power Commission offers value added features like automatic discovery of connected devices. It performs communication tests, generates reports as part of FAT reports. It generates comprehensive reports as part of SAT reports, upgrade firmware etc.

Description

EcoStruxure Power Commission enables the user to perform the following actions for the devices and modules listed in the table below:

- create projects by device discovery .
- perform a communication test and generate reports.
- configuration or settings download and upload for multiple devices.
- install digital modules.
- compare settings between the project (original settings) and device (current settings).
- generate comprehensive project reports.
- check system level firmware status and upgrade devices.
- secured repository of projects in Cloud.
- read information (alarms, measurements, parameters) & display diagnostic information.
- waveform capture.

USB and Ethernet interfaces

EcoStruxure Power Commission provides access to MasterPact MTZ through USB and Ethernet interfaces.
The following table indicates the features that are accessible through each interface:

Features	USB	Ethernet
Protection/Alarm settings	Yes	Yes
Firmware upgrade	Yes	No
Digital modules installation	Yes	No
Device Checkup	Yes	Yes
I/O Module Configuration	Yes	Yes

Key Features:

Device Discovery:

EcoStruxure Power Commission helps the user to discover the communicating devices in a switchboard either through Ethernet or a serial network. Once the devices in the switchboard are discovered, the user can add those devices to the project area.

Device settings:

EcoStruxure Power Commission helps the user to set the protection settings and the alarms of the MasterPact MTZ including dual settings and I/O module configuration.

Communication Test:

When a user has installed communicating devices in a switchboard, EcoStruxure Power Commission offers the capability to test the communication network. Once a communication test is done, the user can generate a time stamped communication test report.

Reports

EcoStruxure Power Commission offers the following reports to the users

- Communication Test Report.
- Comprehensive project report.
- Logs and trip history reports.

Firmware Upgrade

EcoStruxure Power Commission offers the compatibility check and firmware upgrade for the following devices.

- MicroLogic X control units,
- EIFE / IFE,
- I/O modules.

Digital Modules Support

EcoStruxure Power Commission helps the user to buy digital modules which allow digital customization of the devices. EcoStruxure Power Commission directs the user to the GoDigital platform to purchase digital modules. After purchase, EcoStruxure Power Commission helps to install/ uninstall the digital modules in the MicroLogic X control unit in a secured way.

Sharing with Ecostruxure™ Facility Expert

EcoStruxure Power Commission offers the possibility to share project with Facility Expert. A digital logbook is then automatically created for the MasterPact MTZ.

Customer engineering tool: EcoStruxure Power Commission software

Screen: Device homepage

PB115799.eps

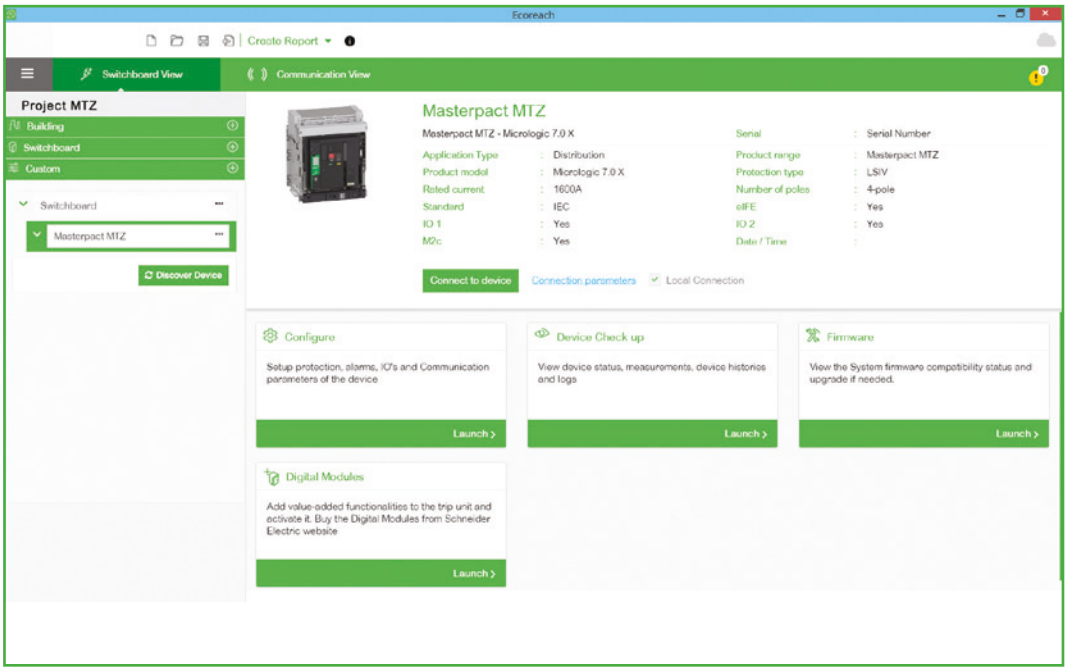

The user can connect to the device from the device home page and do the settings configuration, do a device check up, view maintenance information, upgrade the device with the latest firmware & install/uninstall digital modules.

Screen: general view

PB115800.eps

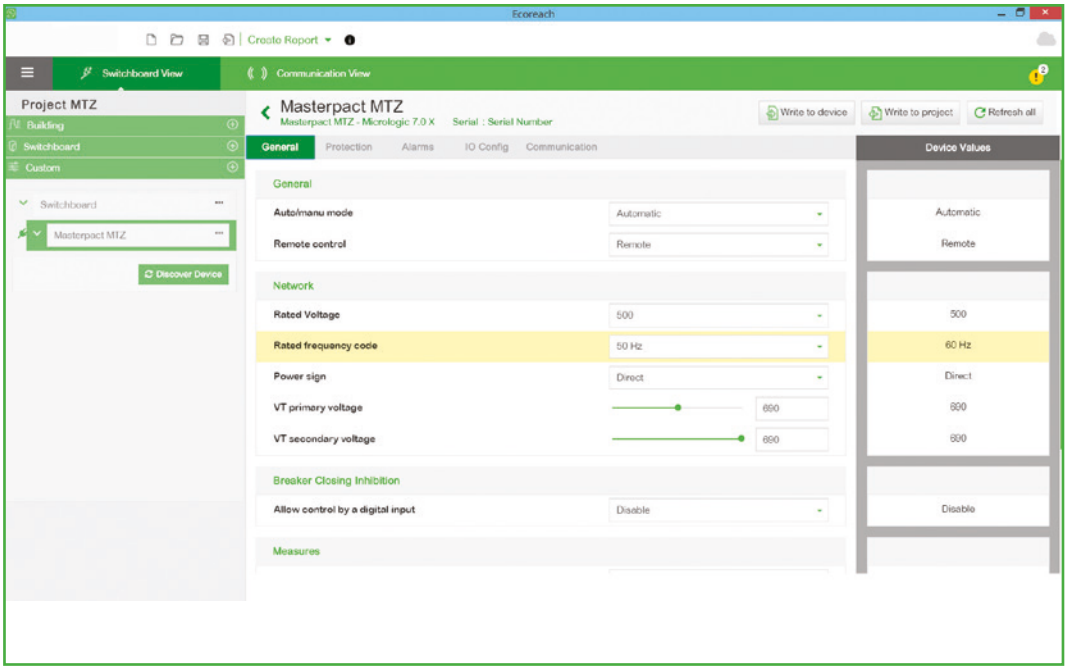

Through the welcome screen, a user can create a project, have access to devices and discover them.
The welcome screen allows the user to open reports to have view of his projects, to modify them, to check if they are synchronized with the cloud and if they are shared with EcoStrucxure Facility expert.
The user can change the language and have access to the help files and to device firmware baseline file.

Customer engineering tool: EcoStruxure Power Commission software

Screen: protections

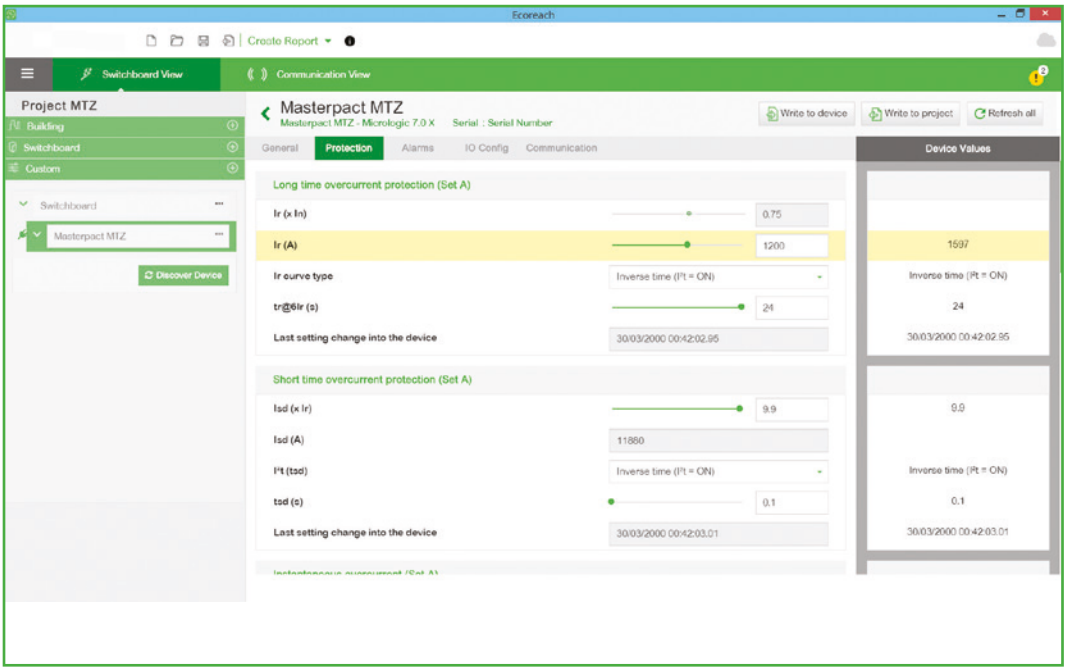

PB115801.eps

Once the user clicks on configuration, this screen appears, through which the user can read/ write different settings and check the settings discrepancies.

Screen: measures

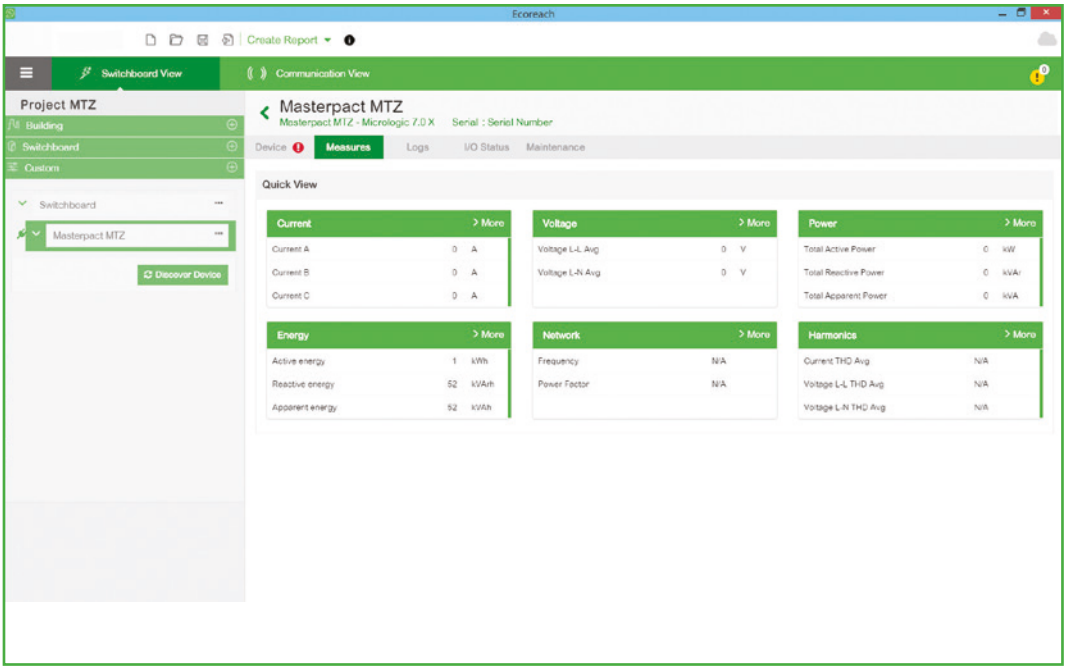

PB115802.eps

Once the user clicks on Device Checkup section from the device home page, this screen appears and the user can view the measurement parameters, IO status , Alarms logs, maintenance parameters etc.

Screen: Digital modules

PB115803.eps

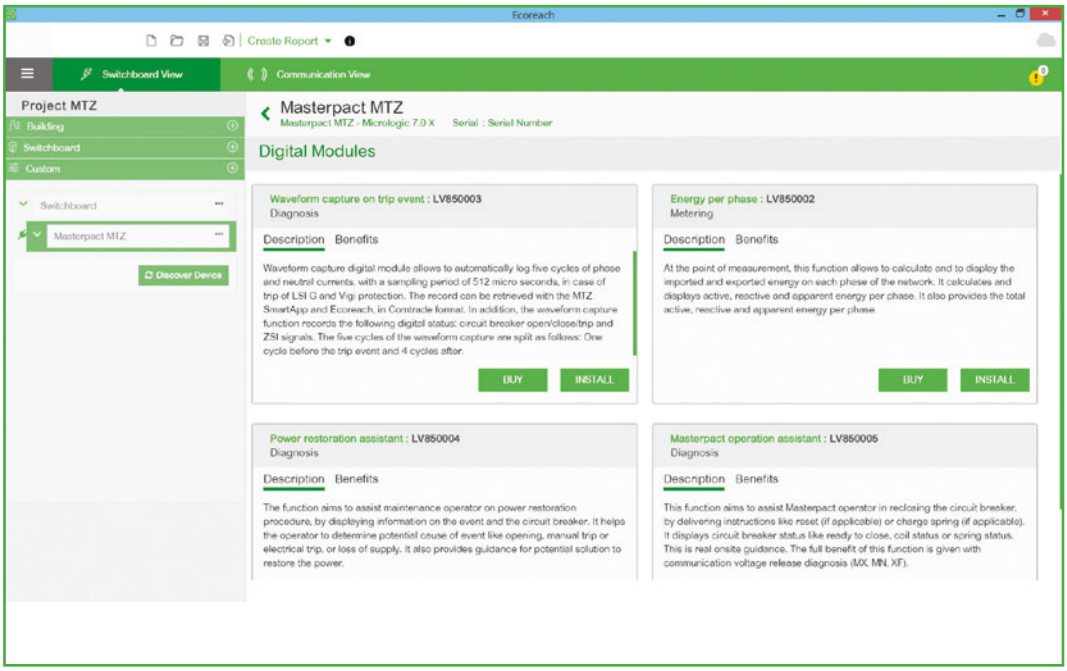

Once the user clicks on Digital modules, this screen appears and the user can buy the desired digital module specific to the device & install the digital module to the device.

Screen: Firmware upgrade

PB115804.eps

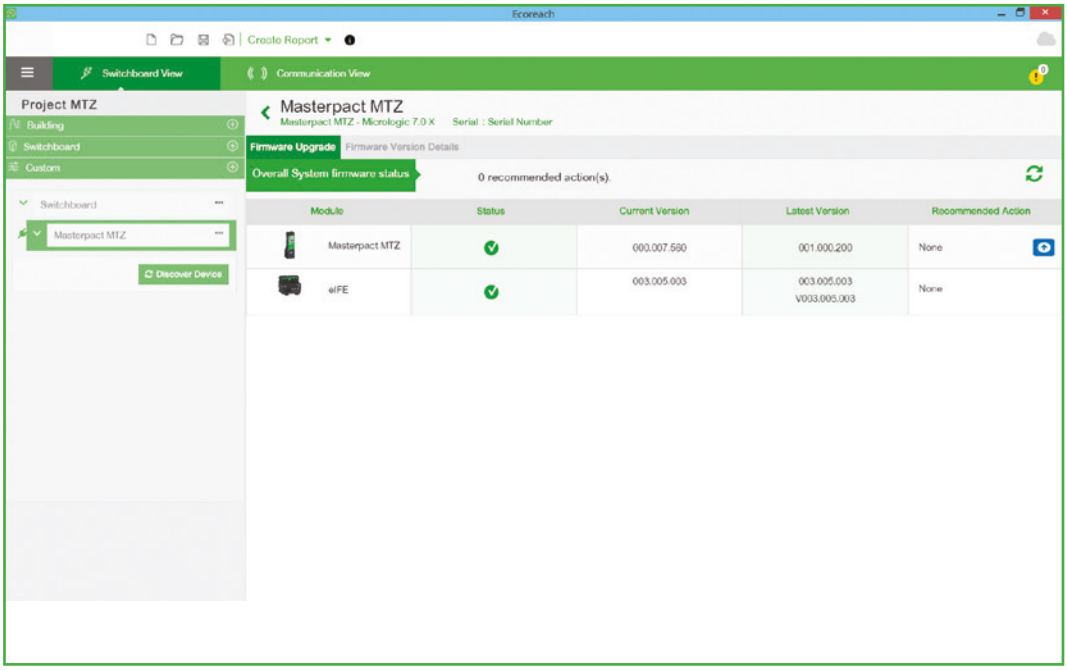

Through the Firmware Upgrade screen, a user can check the compatibility of the firmware versions of the devices and modules connected and upgrade them when needed with the device firmware baseline file.

Integrate in switchboard

Operating conditions F-2

Installation rules
Installation in switchboard F-6
Door interlock catch F-8
Power connection F-10
Recommended busbar drilling MasterPact MTZ1 ..... F-12
Recommended busbar drilling MasterPact MTZ2 - MTZ3 ..... F-13
Temperature derating F-14
Busbar sizing Rear vertical connection F-17
Circuit breaker derating F-18

Dimensions
MasterPact MTZ1 Fixed 3/4-pole devices F-25
MasterPact MTZ1 Drawout 3/4-pole devices F-30
MasterPact MTZ2 08 to MTZ2 32 Fixed 3/4-pole devices F-34
MasterPact MTZ2 08 to MTZ2 32 Drawout 3/4-pole devices F-36
MasterPact MTZ2 40 Fixed 3/4-pole devices F-38
MasterPact MTZ2 40 Drawout 3/4-pole devices F-40
MasterPact MTZ3 Fixed 3/4-pole devices F-42
MasterPact MTZ3 Drawout 3/4-pole devices F-44
Accessories F-46
External modules F-48

Installation
Clusters F-53

Electrical diagrams
MasterPact MTZ1 Fixed and drawout devices F-54
MasterPact MTZ2/MTZ3 Fixed and drawout devices F-56
24 V DC external power supply AD module F-59

F

Other chapters
Select your circuit breakers and switch-disconnectors A-1
Select your MicroLogic X control unit B-1
Customize your MicroLogic X with digital modules C-1
Customize your circuit breaker with accessories D-1
Integrate in Smart panels - Architecture and systems E-1
Integrate in special applications - Source-changeover systems G-1
Services H-1
Order your circuit breaker I-1

Operating conditions

MasterPact MTZ test conditions reproduce different customer environments, in accordance with product and installation standards and relevant maintenance operations [1] to **maximize the product lifespan**.
[1] For full details, please read the MasterPact maintenance guide.

DB419117.eps

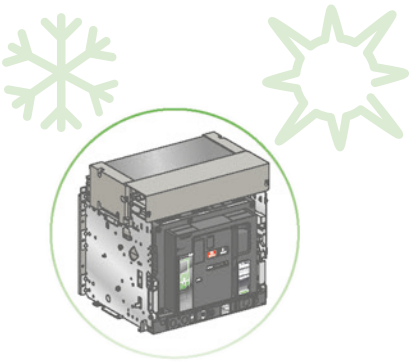

DB419119.eps

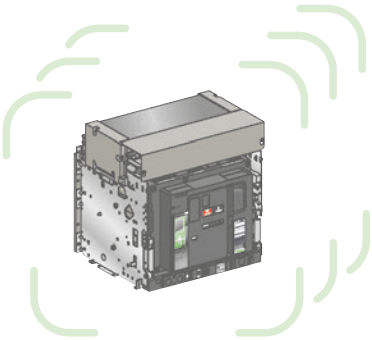

Introduction

MasterPact MTZ is designed for specified operating conditions in terms of temperature, humidity, vibration, altitude, corrosion, and electromagnetic disturbances.
Beyond the limits defined here, the circuit breakers suffer accelerated aging that may rapidly result in malfunctions.
Please refer to the MasterPact Maintenance Guide for additional information and consult us to confirm mechanical and electrical performances in severe conditions.
Example of application with severe operating conditions:

- wind turbines
- power frequency converters installed in the same switchboard or close to the MasterPact circuit breaker
- emergency generators
- high vibration marine applications such as thrusters, anchor positioning systems, etc.

Safety of operation

MasterPact MTZ front face provides reinforced insulation (Class 2) according to IEC 60664-1. It allows Class 2 installation with breaker control from outside.

Ambient temperature

MasterPact MTZ is designed to operate in ambient temperature between -25 °C and +70 °C, providing that the temperature around the breaker inside the switchboard does not exceed +70 °C. If this condition cannot be fulfilled, dedicated measures such as HVAC must be taken.
MasterPact devices have succesfully passed the tests defined by the following standards for extreme atmospheric conditions:

- IEC 60068-2-1: dry cold at -40 °C
- IEC 60068-2-2: dry heat at +85 °C
- IEC 60068-2-30: damp heat (temperature +55 °C, relative humidity 95 %).

Shipping & Storage		**Installation & Commissioning**		**Operation inside the switchboard surrounding the circuit breaker [2]**	
MasterPact MTZ					
Temperature (°C)	Relative Humidity (%)	Temperature (°C)	Relative Humidity (%)	Temperature (°C)	Relative Humidity (%)
-40 °C/+85 °C	0...95 %	-25°C/+70°C	0...95 %	-25°C/+70°C [2]	0...95 %

[2] Manual closing of circuit breaker (using pushbutton) is possible down to -35 °C.

Vibrations

MasterPact devices have successfully passed testing in compliance with IEC 60068-2-6 for the following vibration levels:

- 2 to 13.2 Hz: amplitude ±1 mm
- 13.2 to 100 Hz: constant acceleration 0.7 g.

Vibration testing to these levels is required by merchant marine inspection organisations (such as Veritas, and Lloyd's).

For more details on the IEC 60721-4-3 Class 3M4 standard performance and severities, please contact your Schneider Electric representative.

Operating conditions

Industrial environmental atmospheric conditions

MasterPact devices can operate in the industrial environments defined by standard IEC/EN 60947-1 (pollution degree up to 3).
It is nevertheless advised to check that the devices are installed in suitably cooled switchboards without excessive dust.

Profile	Relevant standard
Corrosive industrial atmospheres	Category 3C2 as per IEC 60721-3-3
Salt mist	Level 2 as per IEC 60068-2-52
Mechanically active substances	Category 3S3 as per IEC 60721-3-3

Beyond these conditions, MasterPact MTZ must be installed inside switchboards with an IP rating equal to or greater than IP54.

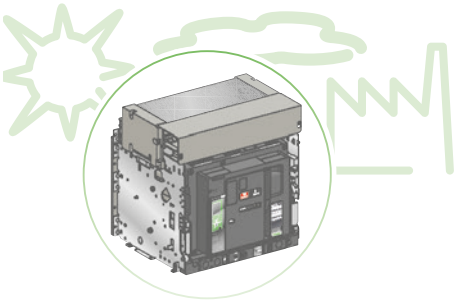

DB419118.eps

Altitude

At altitudes above 2000 meters, the characteristics of the ambient air (electrical resistance, cooling capacity) lower the product characteristics as follows:

Altitude (m)		2000	3000	4000	5000
Impulse withstand voltage Uimp (kV)		12	11	10	8
Rated insulation voltage (Ui)		1000	900	780	700
Maximum rated operational voltage 50/60 Hz Ue (V)	MTZ1 except H3, MTZ2 except H10, MTZ3	690	690	630	560
	MTZ2 H10	1000	890	795	700
Rated current 40 °C		1 x In	0.99 x In	0.96 x In	0.94 x In

Note: Intermediate values can be obtained by interpolation.

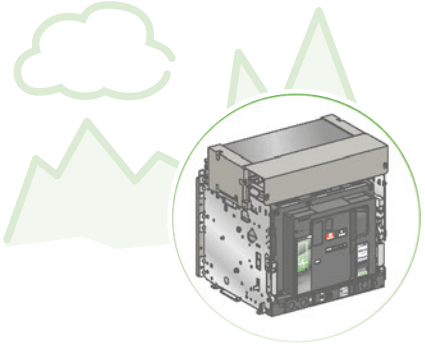

DB419120.eps

Electromagnetic disturbances

MasterPact devices are protected against:
- overvoltages caused by devices that generate electromagnetic disturbances
- overvoltages caused by atmospheric disturbances or by a distribution-system outage (for example, failure of a lighting system)
- devices emitting radio waves (radios, walkie-talkies, radar, etc.)
- electrostatic discharges produced by users.

MasterPact devices have successfully passed the electromagnetic compatibility tests (EMC) defined by the following international standards:
- IEC/EN 60947-2, Annex F
- IEC/EN 60947-2, Annex B (trip units with earth-leakage function).

The above tests ensure that:
- no nuisance tripping occurs
- tripping times are respected.

Immunity: ability of a device to operate without damage in the presence of an electromagnetic disturbance.
Susceptibility: inability of a device to operate without damage in the presence of an electromagnetic disturbance.
Conducted interference: disturbances generated by the device and transmitted by the conductors (of power supply, signalling, or control) in the form of electrical voltage.
Radiated interference: disturbances generated by the device and radiated in the enironment in the form of electromagnetic waves.

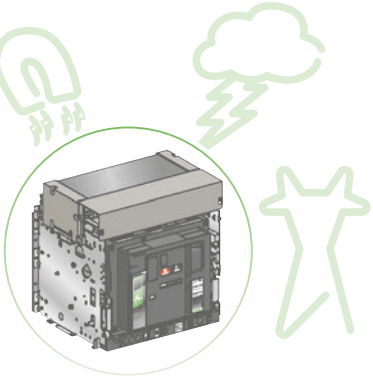

DB419121.eps

Operating conditions

DB421459.ai

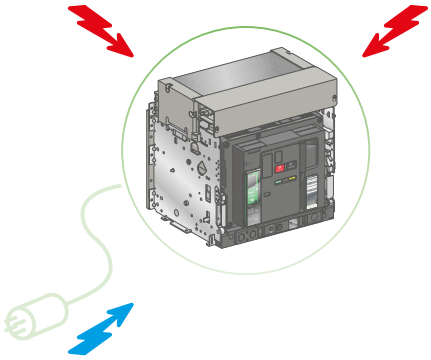

Immunity

Electromagnetic compatibility (EMC)	Standard	Level
To conducted disturbances		
Electrical fast transient/ burst (EFBT/B)	IEC 61000-4-4	-
Surges	IEC 61000-4-5	4
Conducted disturbances induced by radio-frequency fields	IEC 61000-4-6	4
Voltage dips, voltage sags, voltage interruption (AC supply)	IEC 61000-4-11	-
Conducted low frequency	IACS - E10 (§15)	-
Harmonics and Interharmonics including mains signalling at a.c. power ports	IEC 61000-4-13	3
Immunity to conducted, common mode disturbances of main frequencies	IEC 61000-4-16	-
Oscillatory wave	IEC 61000-4-18	-
Voltage dips, voltage sags, voltage interruption (DC supply)	IEC 61000-4-29	-
To radiated disturbances		
Electrostatic discharge	IEC 61000-4-2	3
Radiated radio-frequency electromagnetic fields	IEC 61000-4-3	3
Power frequency magnetic fields	IEC 61000-4-8	-
Impulse magnetic field	IEC 61000-4-9	5
Oscillatory magnetic field	IEC 61000-4-10	-

Emission

To conducted disturbances		
Limits for harmonic current emissions	IEC 61000-3-2	A
Conducted emission	CISPR 11/22	A B
To radiated disturbances		
Radiated emission	CISPR 11/22	A B
EMC and ERM tests compliant with: ■ ETSI EN 300 328 and ERC Recommendation 70-03. ■ FCC CFR47 Part 15, Subpart B and C, RSS-210 Issue 8 ■ ETSI EN 300 440-1 /-2 ■ ETSI EN 302 291-1 /-2.	Directive RTTE	-

Additional EMC Tests not mandatory by IEC 60947-2 and extra EMC performances.

DB421460.ai

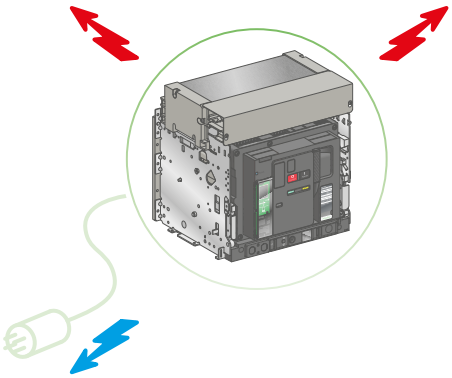

Radiated
Conducted

Life Is On Schneider Electric

Operating conditions

Test values required by IEC/EN 60947-2	MasterPact MTZ tested extra EMC performances
4 kV ; 5 kHz on poles and all AC supplies 2 kV ; 5 kHz on auxiliaries DC supply and signal ports	4 kV ; 5 kHz and 100 kHz on poles and all AC supplies 2 kV ; 5 kHz and 100 kHz on auxiliaries DC supply and signal ports
4 kV CM, 2 kV DM on poles and AC supply > 100 V 2 kV CM, 1 kV DM on AC supply < 100 V	6.6 kV CM, 4.4 kV DM on poles. 4 kV CM, 2 kV DM on MX-XF-MN voltage releases for supply > 100 V. 2 kV CM, 1 kV DM on MX-XF-MN voltage releases for supply < 100 V. 2 kV CM, 1 kV DM on 24 V DC supply. 2 kV CM, on all signals ports.
10 V CM; 0.15…80 MHz	20 V CM; 0.15...80 MHz
40 % (10/12 cycles); 70 % (25/30 cycles); 80 % (250/300 cycles) 0% (0.5 cycle); 0 % (1 cycle); 0 % (250/300 cycles) External power supply failure: ■ 3 interruptions during 5 minutes; ■ switching-off time 30 s each case Combined voltage and frequency variations	
■ AC: 50 Hz to 10 kHz ; 10 % of the rated voltage supply up to harmonic 15. Then reduction at 1 % up to harmonic 100, min 3 V RMS. ■ DC: 50 Hz to10 kHz; Test voltage 10 % of the maximum voltage supply 2 W.	
	AC supply of devices < 16 A
	Only on pole accesses: 30-3 V; CM; 15-150 Hz; 3 V; CM; 150-1.5 kHz 3-30 V; CM; 1.5-15 kHz; 30 V; CM; 15-150 kHz
	2.5 kV CM, 2,5 kV DM; 1 MHz
	40 % (10/12 cycles); 70 % (25/30 cycles) 0 % (0.5 cycle); 0 % (50 ms); 0 % (250/300 cycles) variations on DC : U ±20 %; 10 s. External power supply failure: ■ 3 interruptions during 5 minutes; ■ switching-off time 30 s each case Voltage continuous ±10 %; Voltage cyclic variation 5 %; Voltage ripple 10 %
8 kV air ; 8 kV contact	
10 V/m ; 80 MHz…1 GHz; 1.4…2 GHz	20 V/m; 80 MHz…3 GHz
400 A/m permanently asked by IEC 61557-12	500 A/m permanently, 1000 A/m during 3 s
	1000 A/m (8/20 µs wave)
	100 A/m (100 kHz and 1 MHz)
-	Tested on MX, XF, MN voltage releases for 240 V AC / 380 V AC
-	A B- Without VPS and with additional filters on MX, XF, MN voltage releases. When VPS is connected 24 V DC supply is needed.
	A B- Without 24 V DC supply. When 24 V DC supply is used additional external filtering is required.
The tests are applied to the following functions: ■ Bluetooth (Low Energy and Modulation DSSS) ■ Proprietary connectivity ■ NFC (Near Field Communication)	

F

Installation rules

Installation in switchboard

DB419125.eps

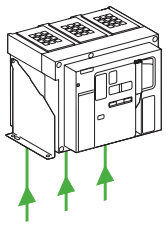

Top and bottom power supply

MasterPact devices can be supplied either from the top or from the bottom without degrading performance, in order to facilitate connection when installed in a switchboard.

DB419126.eps

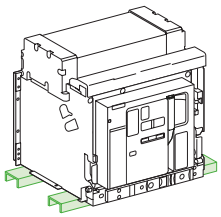

DB419127.eps

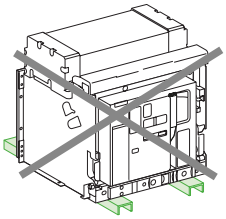

Mounting on rails

Mounting the circuit breaker

It is important to distribute the weight of the device uniformly over a rigid mounting surface such as rails or a base plate.
This mounting plane must be perfectly flat (tolerance on support flatness: 2 mm).
This eliminates any risk of deformation which could interfere with correct operation of the circuit breaker.
MasterPact devices can also be mounted on a vertical plane using the special brackets.

DB419128.eps

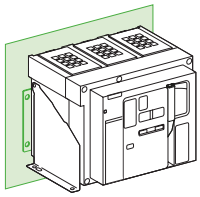

Mounting with vertical brackets

F

DB419122.eps

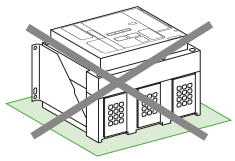

DB419123.eps

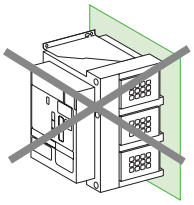

Circuit breaker possible positions

Only one position is autorized.

DB419124.eps

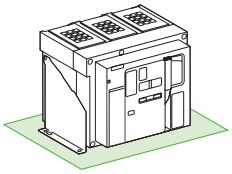

Possible positions

Installation rules

Installation in switchboard

Partitions

Sufficient openings must be provided in partitions to ensure good air circulation around the circuit breaker. Any partition between top and bottom connections of the device must be made of non-magnetic material.
For high currents, 2500 A and above, the metal supports or barriers in the immediate vicinity of a conductor must be made of non-magnetic material **[1]**.
Metal barriers **[2]** through which a conductor passes must not form a magnetic loop.

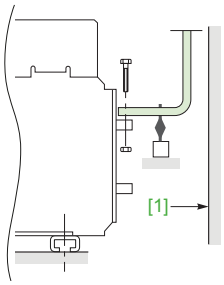

DB419131.eps

[1] non magnetic material

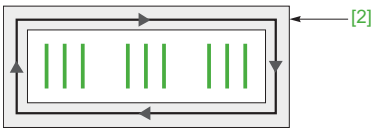

DB419129.eps

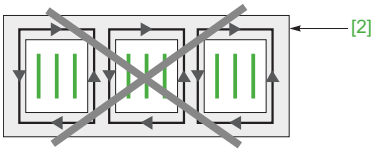

DB419130.eps

Busbars (MTZ1, MTZ2/MTZ3)

Creating a magnetic loop around a conductor, (via the busbar support for example), must be strictly avoided.
To avoid this, either the supports **[3]** and/or the fixing screws **[4]** must be made of non-magnetic materials.

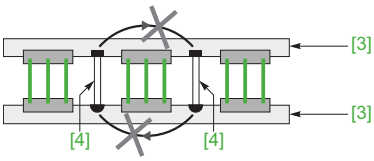

DB419132.eps

Interphase barrier

If the insulation distance between phases is not sufficient (⩽ 14 mm), it is advised to install interphase barriers (taking into account the safety clearances).
Mandatory for MasterPact MTZ1 for operational voltage Ue ⩾ 500 V not compatible with spreaders.

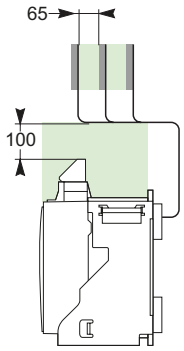

DB419133.eps

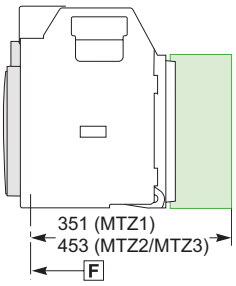

DB419134.eps

F

Installation rules

Door interlock catch

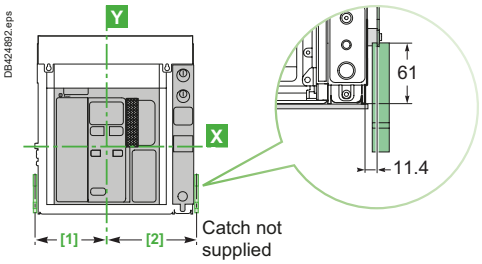

MTZ1

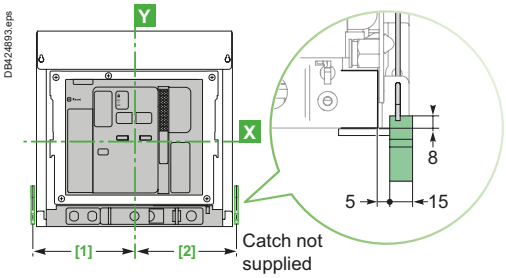

MTZ2 - MTZ3

Door interlock VPEC

Mounted on the right or left-hand side of the chassis, this device inhibits opening of the cubicle door when the circuit breaker is in “connected” or “test” position.
If the breaker is put in the “connected” position with the door open, the door may be closed without having to disconnect the circuit breaker.

Dimensions (mm)

Type	[1]	[2]
MTZ1 08-16 (3P)	135	168
MTZ1 08-16 (4P)	205	168
MTZ2 08-40 (3P)	215	215
MTZ2 08-40 (4P)	330	215
MTZ3 40-63 (3P)	660	215
MTZ3 40-63 (4P)	775	215

F

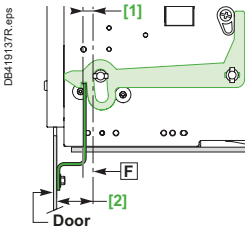

MTZ1 06-16

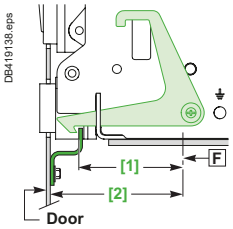

MTZ2 08-40

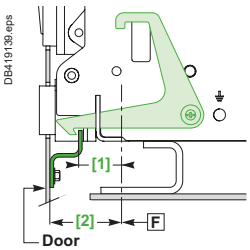

MTZ3 40-63

Breaker in “connected” or “test” position

Door cannot be opened

Type	[1]	[2]
MTZ1 08-16 (3P)	5	23
MTZ1 08-16 (4P)	5	23
MTZ2 08-40 (3P)	87	103
MTZ2 08-40 (4P)	87	103
MTZ3 40-63 (3P)	37	53
MTZ3 40-63 (4P)	37	53

Life Is On Schneider Electric

Installation rules

Door interlock catch

Breaker in “disconnected” position

Door can be opened

Mounted on the right or left-hand side of the chassis, this device inhibits opening of the cubicle door when the circuit breaker is in “connected” or “test” position.
It the breaker is put in the “connected” position with the door open, the door may be closed without having to disconnect the circuit breaker.

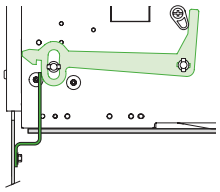

MTZ1 06-16

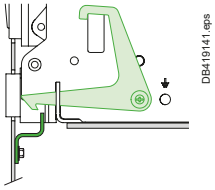

MTZ2 08-40

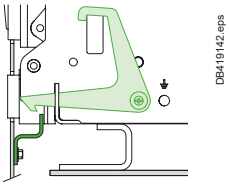

MTZ3 40-63

Cable-type door interlock IPA

This option prevents opening the door when the circuit breaker is closed and prevents circuit breaker closing when the door is open.
For this, a special plate associated with a lock and a cable is mounted on the right side of the circuit breaker.
With this interlock installed, the source changeover function cannot be implemented.

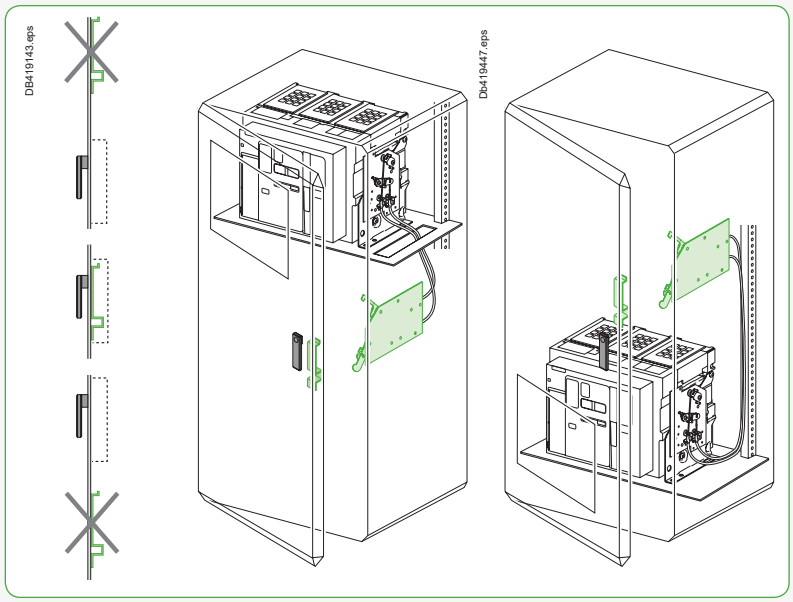

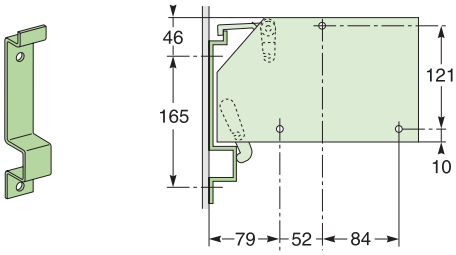

F

Installation rules

Power connection

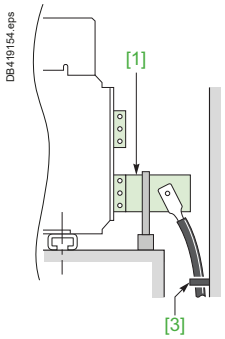

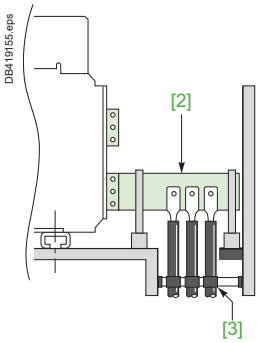

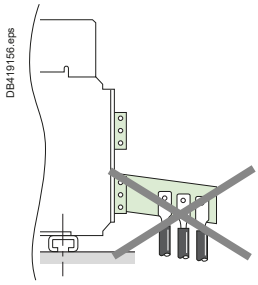

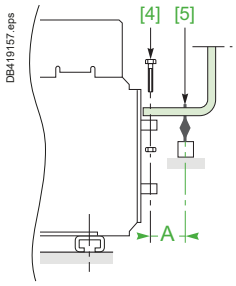

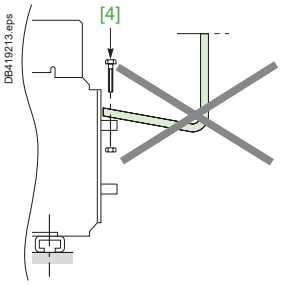

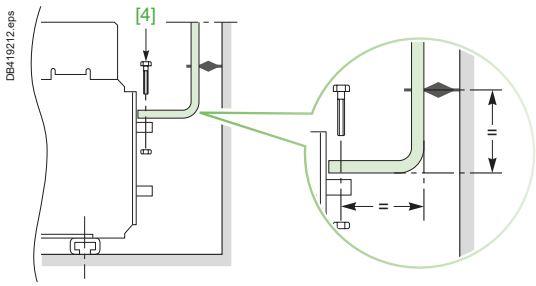

Cable connections

If cables are used for the power connections, make sure that their weight is not applied to the circuit breaker power terminals, but is supported by the panel structure.
For this, make the connections as follows:

- ■ extend the device terminals using short bars designed and installed according to the recommendations for bar-type power connections:
  - □ for a single cable, use solution **[1]**
  - □ for a multiple cables, use solution **[2]**.
- ■ in all cases, follow the general rules for connections to busbars:
  - □ position the cable lugs before inserting the bolts
  - □ the cables must be firmly secured to the framework **[3]**.

Busbar connections

Maximum distance A between busbar to circuit breaker connection and the first busbar support or spacer with respect to the value of the prospective short-circuit current.

Isc (kA)	Distance A (mm)
30	350
50	300
65	250
80	150
100	150
150	150

- ■ The busbars must be suitably adjusted to ensure that the connection points are positioned on the power terminals before the bolts **[4]** are inserted.
- ■ The busbars weight must be supported by the busbar supports **[5]** that are solidly fixed to the switchboard framework and not by the circuit breaker power terminals.

Electrodynamic stresses

The first busbar support must be situated within a maximum distance **(A)** from the power terminal of the circuit breaker. This distance must be respected so that the busbar can withstand the electrodynamic stresses between phases in the event of a short circuit.The table above gives the maximum distance **(A)** according to the prospective short-circuit current Isc.

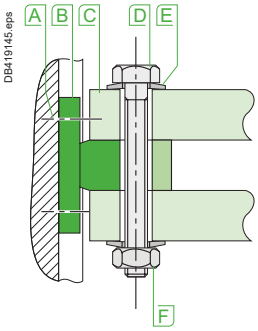

A Terminal screw factory-tightened to 13 Nm (MTZ1) and 16 Nm (MTZ2/MTZ3)
B Breaker terminal
C Busbar
D Bolt
E Washer
F Nut

Clamping

Correct clamping of busbars depends amongst other factors, on the tightening torques used for the nuts and bolts. Over-tightening may have the same consequences as under-tightening.
For connecting busbars (Cu ETP-NFA51-100) to the circuit breaker, the tightening torques to be used are shown in the table below.
These values are for use with copper busbars and steel nuts and bolts, Class 8.8.
The same torques can be used with AGS-T52 quality aluminium bars (French standard NFA 02-104 or American National Standard H-35-1).

Tightening torques

Ø (mm) Nominal	Ø (mm) Drilling	Tightening torques (Nm) with grower or flat washers	Tightening torques (Nm) with contact or corrugated washers
10	**11**	37.5	50

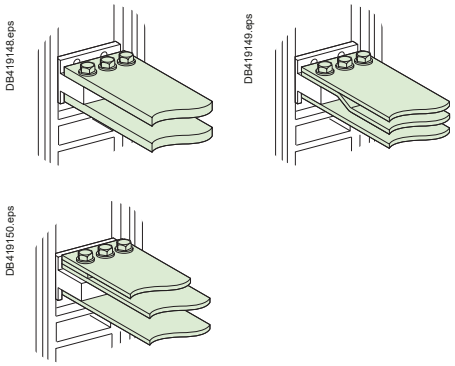

Busbar drilling

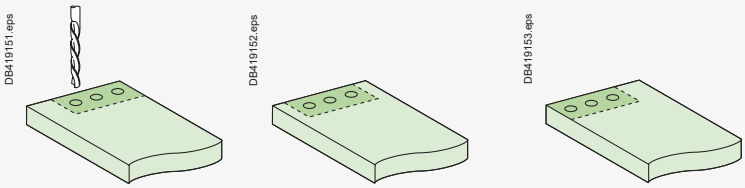

Isolation distance

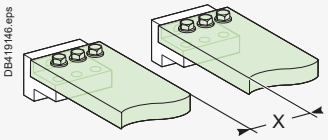

Ui	X min (mm)
600 V	8
1000 V	14

Busbar bending

When bending busbars maintain the radius indicated below (a smaller radius would cause cracks).

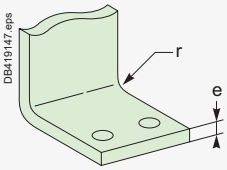

e (mm)	Bending radius r (mm)	
	Min	Recommended
5	5	7.5
10	15	18 to 20

F

Installation rules

Recommended busbar drilling MasterPact MTZ1

Rear connection

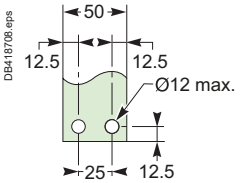

Rear connection with spreaders

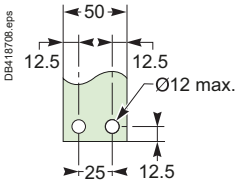

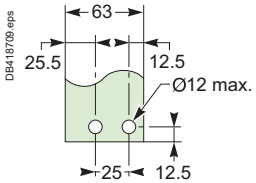

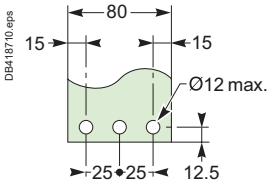

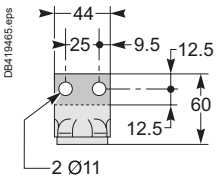

Middle left or middle right spreader for 4P

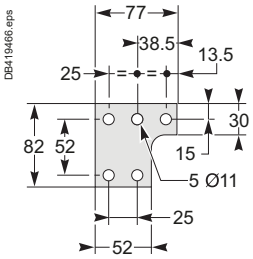

Middle spreader for 3P

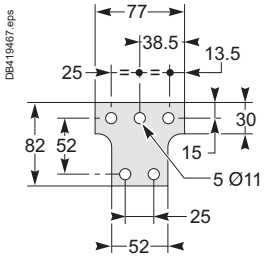

Left or right spreader for 4P

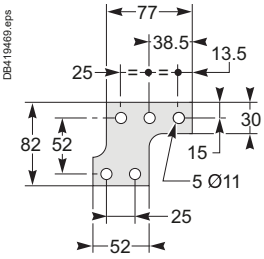

Left or right spreader for 3P

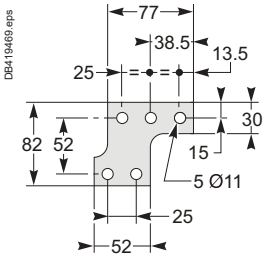

Vertical rear connection

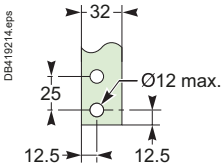

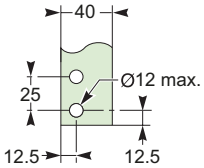

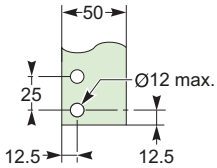

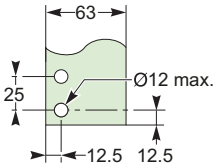

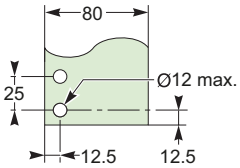

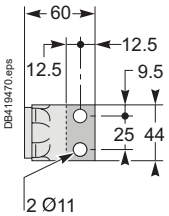

Front connection

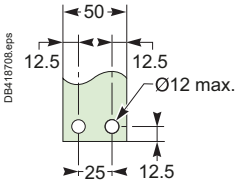

Front connection via vertical connection adapters

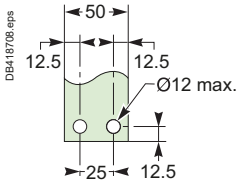

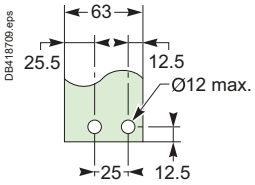

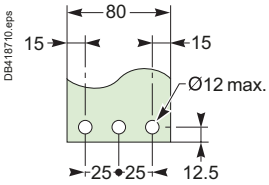

Top connection

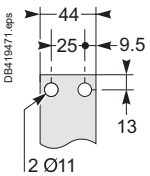

Bottom connection

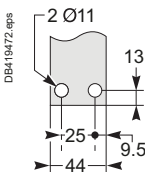

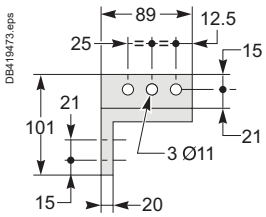

Installation rules

Recommended busbar drilling MasterPact MTZ2 - MTZ3

Horizontal rear connection MTZ2 08 to 32

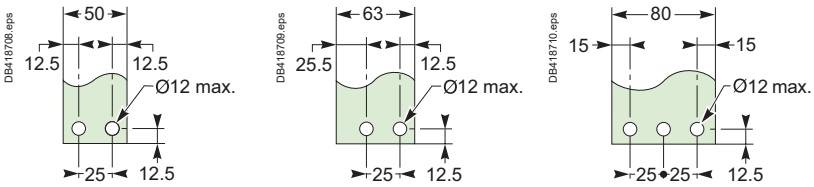

MTZ3 40 to 50

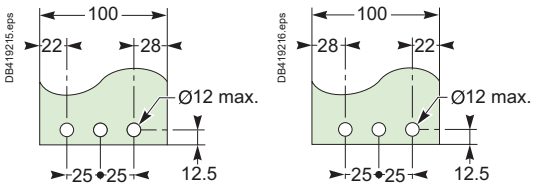

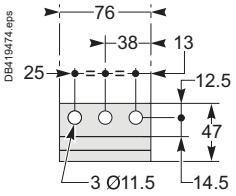

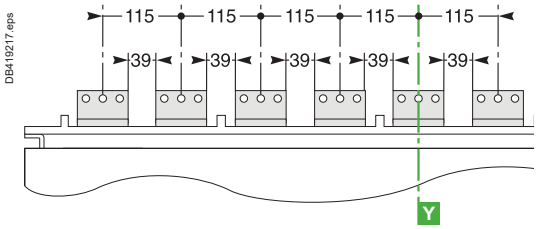

Vertical rear connection MTZ2 08 to 32, MTZ3 40 to 50

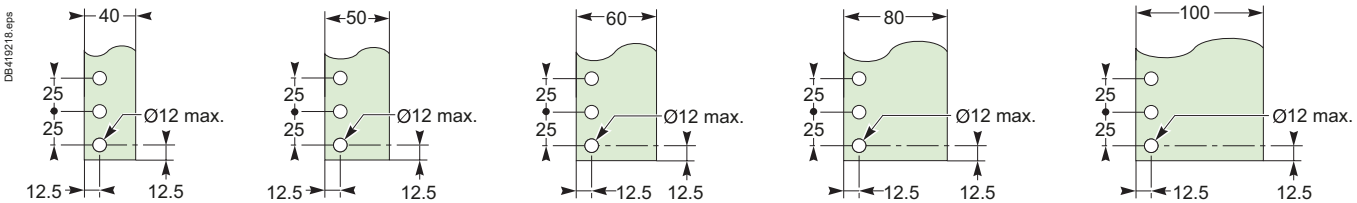

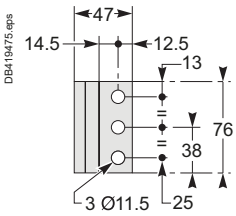

Front connection MTZ2 08 to 32

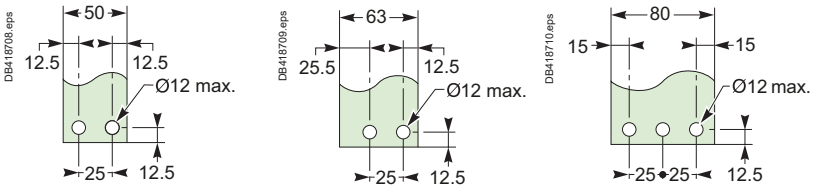

Top connection

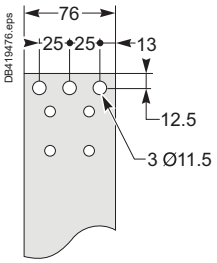

Bottom connection

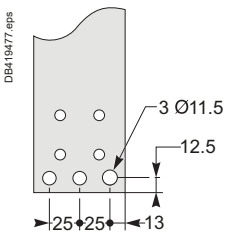

F

Installation rules

Temperature derating

The current rating of a high-ampere frame circuit breaker is highly dependent on the actual conditions of installation and connection.
In addition to the cross-section of the connecting busbars, there are other strongly influencing factors like their orientation (affecting convection efficiency), their length, their layout (number of bars, shape, spacing, etc. affecting conduction efficiency in a.c.), but also the ventilation and the presence of other devices in the vinicity. Thus it is not possible, for ratings above 1600 A, to give strict values of current rating without performing a temperature rise test in the actual swichboard configuration, as indicated in clause 10.10.4 of IEC 61439-1 (Low Voltage switchgear and controlgear assemblies - Part 1: General rules). Nevertheless, the following pages give guidelines for a first approach of connection sizing, installation conditions, and current rating:
■ Pages F-14 and F-15: indicates the maximum current rating depending on the ambient temperature around MasterPact, with standard busbar sizes as per IEC 60947-2 and IEC 61439-1.
For other busbar sizes, see page F-16 and F-17.
These values are based on tests performed on the circuit breaker alone in free air, as per IEC 60947-2, and give a first approach of the thermal performance of the device in standard conditions. It cannot be fully representative of the actual performance of the device in a switchboard. For derating in switchboards, see Pages F-18 to F-24.
■ Page F-16 and F-17: suggests dimension of busbars to reach a given current in a given ambient temperature around the breaker.
■ Pages F-18 to F-24: gives the current rating (or derating) of MasterPact in a switchboard, depending on:
□ the ambient temperature around the switchboard
□ the ventilation (IP31, IP54)
□ the number of breakers in the same column and the position of the breaker considered
□ the busbar size and connection orientation (vertical or horizontal).

PB115714.eps

PB115713.eps

Evaluation and verification of the temperature Ti surrounding the circuit breakers installed in low-voltage switchgear or controlgear assemblies

Requirements for the temperature rise in low-voltage switchgear and controlgear assemblies with associated calculations and tests are specified in IEC 61439-1/2 [1].
These two IEC standards lay down the definitions, the service conditions, and the requirements for construction, performance and verification of low-voltage switchgear and controlgear assemblies.
The requirements dedicated to the design, the verifications and the test of the low voltage equipment covered by the scope of IEC 61439-1/2 can be summarized as follows:
- the design of every low-voltage switchgear shall be verified to prove its full compliance with IEC 61439-1/2.
- this is mandatory for all the constructional and performance requirements specified in the standards. Extrapolations or analogies with similar assemblies are not allowed.
- concerning the temperature rise inside an assembly, type tests are mandatory for rated currents above 1600 A.
- for currents up to and including 1600 A, the verification of temperature rise may be performed by calculation following the method defined in IEC 60890 technical report [1].

The IEC 60890 technical report proposes a method to determine the temperature rise of the air inside the low-voltage enclosure without forced ventilation. The method is applicable to enclosed assemblies or partitioned sections of assemblies.
Thus, for low-voltage assemblies with a rated current up to 1600 A, the internal temperature Ti surrounding the circuit breakers and their connections may be evaluated following the method given in IEC 60890 technical report.

According to chapter 10.10.4.3.1 of IEC 61439-1, the method for the evaluation of the temperature Ti surrounding the circuit breaker is applicable if the following conditions are fulfilled:
- The power loss data for all built-in components is available from the component manufacturer.
- There is an approximately even distribution of power losses inside the enclosure;
- The rated current of the circuits of the assembly to be verified shall not exceed 80 % of the rated conventional free air thermal current (Ith) if any, or the rated current (In) of the switching devices and electrical components included in the circuit.
- The mechanical parts and the installed equipment are arranged so that air circulation is not significantly impeded.

The following data is needed to calculate the temperature rise of the air inside an enclosure:
- Dimensions of the enclosure: height/width/depth;
- Type of installation of the enclosure;
- Design of enclosure, i.e. with or without ventilation openings;
- Number of internal horizontal partitions;
- Effective power loss of equipment installed in the enclosure;
- Effective power losses (Pn) of conductors installed in the enclosure.

Note: Experience shows that for external ambient temperatures up to 35 °C, the internal temperature inside IP 31 low-voltage switchgear and controlgear assemblies does not exceed 60 °C. For degrees of protection above IP 31 the internal temperature reaches 70 °C.

[1] IEC 61439-1: Low-voltage switchgear and controlgear assemblies-Part 1: General rules
IEC 61439-2: Low-voltage switchgear and controlgear assemblies-Part 2: Power switchgear and controlgear assemblies
IEC/TR 60890: A method of temperature-rise verification of low-voltage switchgear and controlgear assemblies by calculation.

Power dissipation (W)

- Total power dissipation is the value measured at In, 50/60 Hz, for a 3-pole or 4-pole breaker, in steady state temperature as per IEC/EN 60947-2.

Type of MasterPact	MTZ1								MTZ2												MTZ3		
	06		08		10		12	16	08		10		12		16		20	25	32	40	40	50	63
	H1 H2 H3	L1	H1 H2 H3	L1	H1 H2 H3	L1	H1 H2 H3	H1 H2 H3	N1	H1 H2 L1 H10	N1	H1 H2 L1 H10	N1	H1 H2 L1 H10	N1	H1 H2 L1 H10	N1 H1 H2 L1 H10	H1 H2 L1 H10	H1 H2 L1 H10	H1 H2 L1 H10	H1 H2	H1 H2	H1 H2
Drawout	55	115	90	140	150	230	250	460	137	100	220	150	330	230	480	390	470	600	670	900	550	950	1200
Fixed	30	45	50	80	80	110	130	220	62	42	100	70	150	100	220	170	250	260	420	650	390	660	1050

Temperature derating

- The table below indicates the maximum current rating, for each connection type, as a function of Ti around the circuit breaker and the busbars. Circuit breakers with mixed connections have the same derating as horizontally connected breakers.
- Ti: temperature around the circuit breaker and its connection.

Drawout

Type of MasterPact		MTZ1 H1 - H2 - H3 -L1					MTZ2 N1 - H1 - H2 - H3 -L1 -H10									MTZ3 H1 - H2		
		06	08	10	12	16	08	10	12	16	20 [2]	20 [3]	25	32	40	40	50	63
Ti [1] (°C)		In max. (A)																
In front or rear horizontal	40	630	800	1000	1250	1600	800	1000	1250	1600	2000	2000	2500	3200	4000	4000	5000	–
	45					1560									3900			
	50					1520								3100	3800			
	55					1480								3030	3700			
	60					1440					1900			2950	3600			
	65				1200	1400					1830	1950	2450	2880	3500			
	70				1140	1360				1520	1750	1900	2370	2800	3400			
In rear vertical	40	630	800	1000	1250	1600	800	1000	1250	1600	2000	2000	2500	3200	4000	4000	5000	6300
	45																	
	50																	
	55					1560									3900			
	60					1520									3800			6200
	65					1480									3700			6000
	70					1440								3100	3600			5800

Fixed

Type of MasterPact		MTZ1 H1 - H2 - H3 -L1					MTZ2 N1 - H1 - H2 - H3 -L1 -H10									MTZ3 H1 - H2		
		06	08	10	12	16	08	10	12	16	20 [2]	20 [3]	25	32	40	40	50	63
Ti [1] (°C)		In max. (A)																
In front or rear horizontal	40	630	800	1000	1250	1600	800	1000	1250	1600	2000	–	2500	3200	4000	4000	5000	–
	45																	
	50																	
	55														3900			
	60					1560					1920			3140	3800			
	65					1520					1850			3050	3700			
	70					1480					1770			2960	3600			
In rear vertical	40	630	800	1000	1250	1600	800	1000	1250	1600	2000	–	2500	3200	4000	4000	5000	6300
	45																	
	50																	
	55																	
	60																	
	65														3900			
	70					1560									3800			6200

[1] Ti: temperature around the circuit breaker and its connections
[2] Type: H1/H2/H3
[3] Type: L1

In. max. admissible.

F

Installation rules

Busbar sizing, front or rear horizontal connection

MasterPact	Max. service current	Ti : 40 °C		Ti : 50 °C		Ti : 60 °C		Ti : 70 °C	
		No. of 5 mm thick bars	No. of 10 mm thick bars	No. of 5 mm thick bars	No. of 10 mm thick bars	No. of 5 mm thick bars	No. of 10 mm thick bars	No. of 5 mm thick bars	No. of 10 mm thick bars
MTZ1 06	400	2b.30 x 5	1b.30 x 10	2b.30 x 5	1b.30 x 10	2b.30 x 5	1b.30 x 10	2b.40 x 5	1b.40 x 10
MTZ1 06	630	2b.40 x 5	1b.40 x 10	2b.40 x 5	1b.40 x 10	2b.50 x 5	1b.50 x 10	2b.50 x 5	1b.60 x 10
MTZ1 08 or MTZ2 08	800	2b.50 x 5	1b.50 x 10	2b.50 x 5	1b.50 x 10	2b.60 x 5	1b.60 x 10	3b.50 x 5	2b.40 x 10
MTZ1 10 or MTZ2 10	1000	2b.60 x 5	1b.60 x 10	2b.60 x 5	1b.60 x 10	2b.80 x 5	2b.40 x 10	3b.60 x 5	2b.50 x 10
MTZ1 12 or MTZ2 12	1250	3b.50 x 5	2b.40 x 10	3b.50 x 5	2b.40 x 10	3b.60 x 5	2b.50 x 10	3b.80 x 5	2b.60 x 10
MTZ1 12 or MTZ2 12	1250	2b.80x5		2b.80x5					
MTZ1 16 or MTZ2 16	1400	3b.60 x 5	2b.50 x 10	3b.60 x 5	2b.50 x 10	3b.80 x 5	2b.60 x 10	3b.80 x 5	3b.50 x 10
MTZ1 16 or MTZ2 16	1600	3b.80 x 5	2b.60 x 10	3b.80 x 5	2b.60 x 10	3b.100 x 5	3b.50 x 10	3b.100 x 5	2b.80 x 10
MTZ2 20	1800	3b.80 x 5	2b.60 x 10	3b.80 x 5	2b.60 x 10	3b.100 x 5	2b.80 x 10	4b.100 x 5	3b.60 x 10
MTZ2 20	2000	3b.100 x 5	2b.80 x 10	3b.100 x 5	2b.80 x 10	4b.100 x 5	3b.60 x 10	4b.100 x 5	2b.100 x 10
MTZ2 25	2200	4b.80 x 5	2b.80 x 10	4b.80 x 5	2b.80 x 10	4b.100 x 5	2b.100 x 10	5b.100 x 5	3b.80 x 10
MTZ2 25	2500	4b.100 x 5	2b.100 x 10	4b.100 x 5	2b.100 x 10	5b.100 x 5	3b.80 x 10	6b.100 x 5	3b.100 x 10
MTZ2 32	2800	5b.100 x 5	3b.80 x 10	5b.100 x 5	3b.80 x 10	6b.100 x 5	3b.100 x 10	7b.100 x 5	4b.80 x 10
MTZ2 32	3000	6b.100 x 5	3b.100 x 10	6b.100 x 5	3b.100 x 10	7b.100 x 5	4b.80 x 10	8b.100 x 5	4b.100 x 10
MTZ2 32	3200	7b.100 x 5	3b.100 x 10	7b.100 x 5	3b.100 x 10	8b.100 x 5	4b.100 x 10		5b.100 x 10
MTZ2 40	3800		4b.100 x 10		4b.100 x 10		5b.100 x 10		6b.100 x 10
MTZ2 40	4000		5b.100 x 10		5b.100 x 10		6b.100 x 10		7b.100 x 10
MTZ3 40	4000		5b.100 x 10		5b.100 x 10		6b.100 x 10		7b.100 x 10
MTZ3 50	4500		6b.100 x 10		6b.100 x 10		7b.100 x 10		8b.100 x 10
MTZ3 50	5000		7b.100 x 10		7b.100 x 10		8b.100 x 10		

With MasterPact MTZ1, it is recommended to use 50 mm-wide bars (see “Busbar drilling” in page F-12).

F

DB419228.eps

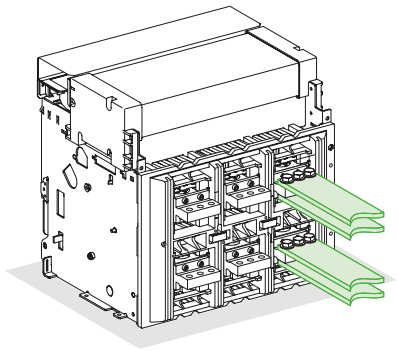

Factors in tables

- maximum permissible busbar temperature: 100 °C
- Ti: temperature around the circuit breaker and its connections
- busbar material is unpainted copper

Example

Conditions:
- drawout version
- horizontal busbars
- Ti: 50 °C
- service current: 1800 A

Solution:
For Ti = 50 °C, use an MTZ2 20 which can be connected with three 80 x 5 mm bars or two 60 x 10 mm bars.

Note: For MasterPact NT/NW, 63 mm wide bars were recommended.
For MasterPact MTZ, 63 mm wide bars have been replaced by 60 mm wide bars which are more standard. However 63 mm wide bars can be used instead of 60 mm.

Note: The values indicated in these tables are extrapolated from test data and theoretical calculations. These tables are only intended as a guide and cannot replace industrial experience or a temperature rise test.

Installation rules

Busbar sizing Rear vertical connection

MasterPact	Maximum service current	Ti : 40 °C		Ti : 50 °C		Ti : 60 °C		Ti : 70 °C	
		Nb. of 5 mm thick bars	Nb. of 10 mm thick bars	Nb. of 5 mm thick bars	Nb. of 10 mm thick bars	Nb. of 5 mm thick bars	Nb. of 10 mm thick bars	Nb. of 5 mm thick bars	Nb. of 10 mm thick bars
MTZ1 06	400	1b.40 x 5	1b.30 x 10	1b.40 x 5	1b.30 x 10	1b.50 x 5	1b.30 x 10	1b.50 x 5	1b.30 x 10
MTZ1 06	630	1b.60 x 5	1b.30 x 10	1b.60 x 5	1b.30 x 10	2b.40 x 5	1b.40 x 10	2b.40 x 5	1b.40 x 10
MTZ1 08 or MTZ2 08	800	2b.40 x 5	1b.40 x 10	2b.40 x 5	1b.40 x 10	2b.50 x 5	1b.50 x 10	2b.50 x 5	1b.50 x 10
MTZ1 10 or MTZ2 10	1000	2b.50 x 5	1b.50 x 10	2b.50 x 5	1b.50 x 10	2b.60 x 5	1b.60 x 10	2b.60 x 5	1b.60 x 10
MTZ1 12 or MTZ2 12	1250	2b.60 x 5	1b.60 x 10	2b.60 x 5	1b.60 x 10	3b.50 x 5	2b.40 x 10	2b.80 x 5	2b.50 x 10
MTZ1 16 or MTZ2 16	1400	2b.80 x 5	1b.80 x 10	2b.80 x 5	1b.80 x 10	3b.60 x 5	2b.50 x 10	2b.100 x 5	2b.50 x 10
MTZ1 16 or MTZ2 16	1600	3b.60 x 5	2b.50 x 10	3b.60 x 5	2b.50 x 10	2b.100 x 5	2b.60 x 10	3b.80 x 5	2b.60 x 10
MTZ2 20	1800	2b.100 x 5	1b.100 x 10	2b.100 x 5	1b.100 x 10	3b.80 x 5	2b.60 x 10	3b.100 x 5	2b.80 x 10
MTZ2 20	2000	3b.80 x 5	2b.60 x 10	3b.80 x 5	2b.60 x 10	3b.100 x 5	2b.80 x 10	3b.125 x 5	2b.100 x 10
MTZ2 25	2200	3b.100 x 5	2b.60 x 10	3b.100 x 5	2b.60 x 10	4b.80 x 5	2b.80 x 10	4b.100 x 5	2b.100 x 10
MTZ2 25	2500	4b.100 x 5	2b.80 x 10	4b.100 x 5	2b.80 x 10	4b.100 x 5	2b.100 x 10	5b.100 x 5	3b.80 x 10
MTZ2 32	2800	4b.100 x 5	2b.100 x 10	4b.100 x 5	2b.100 x 10	5b.100 x 5	3b.80 x 10	6b.100 x 5	3b.100 x 10
MTZ2 32	3000	5b.100 x 5	3b.80 x 10	5b.100 x 5	3b.80 x 10	6b.100 x 5	3b.80 x 10		3b.100 x 10
MTZ2 32	3200	6b.100 x 5	3b.100 x 10	6b.100 x 5	3b.100 x 10		4b.80 x 10		3b.120 x 10
MTZ2 40	3800		4b.100 x 10		4b.100 x 10		4b.100 x 10		4b.120 x 10
MTZ2 40	4000		4b.100 x 10		4b.100 x 10		5b.100 x 10		5b.120 x 10
MTZ3 40	4000		4b.100 x 10		4b.100 x 10		5b.100 x 10		5b.100 x 10
MTZ3 50	4500		5b.100 x 10		5b.100 x 10		6b.100 x 10		6b.120 x 10
MTZ3 50	5000		6b.100 x 10		6b.100 x 10		7b.100 x 10		7b.120 x 10
MTZ3 63	5700		7b.100 x 10		7b.100 x 10		8b.100 x 10		8b.120 x 10
MTZ3 63	6300		8b.100 x 10		8b.100 x 10				

DB419229.eps

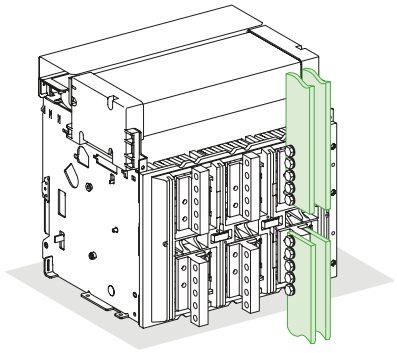

Factors in tables

- maximum permissible busbar temperature: 100 °C
- Ti: temperature around the circuit breaker and its connections
- busbar material is unpainted copper

Example

Conditions:
- drawout version
- vertical connections
- Ti: 40 °C
- service current: 1100 A

Solution:
For Ti = 40 °C use an MTZ1 12 or MTZ2 12 which can be connected with two 60 x 5 mm bars or with one 60 x 10 mm bar

Note: For MasterPact NT/NW, 63 mm wide bars were recommended.
For MasterPact MTZ, 63 mm wide bars have been replaced by 60 mm wide bars which are more standard. However 63 mm wide bars can be used instead of 60 mm.

Note: The values indicated in these tables are extrapolated from test data and theoretical calculations. These tables are only intended as a guide and cannot replace industrial experience or a temperature rise test.

Installation rules

Circuit breaker derating

2000 x 400 x 400 area of outlet vents: 150 cm²

> MasterPact MTZ1 06-16 H1/H2/H3/L1

Type		MTZ1 06 H1/H2/H3/L1		MTZ1 08 H1/H2/H3/L1		MTZ1 10 H1/H2/H3/L1		MTZ1 12 H1/H2/H3		MTZ1 16 H1/H2/H3	
Switchboard composition											
Connection type											
Busbar dimensions (mm)		2b. 40 x 5		2b. 50 x 5		3b. 60 x 5		3b. 60 x 5	3b. 50 x 5	3b. 80 x 5	3b. 60 x 5
Ventilated switchboard (→ IP31)											
	4					H1/L1	H1/L1				
T_a = 35 °C	3	630	630	800	800	1000/1000	1000/1000	1250	1250	1400	1520
	2										
	1										
T_a = 45 °C	4										
	3	630	630	800	800	1000/950	1000/1000	1250	1250	1330	1440
	2										
	1										
T_a = 55 °C	4										
	3	630	630	800	800	1000/890	1000/960	1200	1250	1250	1340
	2										
	1										
Non ventilated switchboard (→ IP54)											
T_a = 35 °C	4										
	3	630	630	800	800	1000/960	1000/1000	1250	1250	1330	1400
	2										
	1										
T_a = 45 °C	4										
	3	630	630	800	800	1000/910	1000/980	1220	1250	1260	1330
	2										
	1										
T_a = 55 °C	4										
	3	630	630	800	800	1000/860	1000/930	1150	1230	1200	1260
	2										
	1										

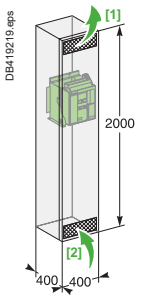

[1] Area of outlet vents: 150 cm²
[2] Area of inlet vents: 150 cm²

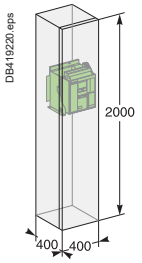

F

Factors in tables

- switchboard dimensions
- number of circuit breakers installed
- type of breaker connections
- drawout versions
- ambient temperature outside the switchboard: Ta (IEC 61439-1)

Factors affecting switchboard design

- The temperature around the circuit breaker and its connections is used to define the type of circuit breaker to be used and its connection arrangement.
- Vents at the top and bottom of the cubicles considerably reduce the temperature inside the switchboard, but must be designed so as to respect the degree of protection provided by the enclosure. For weatherproof heavy-duty cubicles, a forced ventilation system may be required.
- The heat dissipated by the devices installed in the switchboard is the heat dissipated by the circuit breakers under normal conditions (service current).
- The size of the enclosure determines the volume for cooling calculations.
- Switchboard installation mode: free-standing, against a wall, etc.
- Horizontal partitions can obstruct air circulation within the enclosure.

Note: The values indicated in these tables are extrapolated from test data and theoretical calculations.
These tables are only intended as a guide and cannot replace industrial experience or a temperature rise test.
The values indicated for the cross-sectional area of the vents should be considered as general indications only, given that the thermal performance of a switchboard with natural ventilation depends on many parameters, including shape, porosity, and location of vents and air flow within the switchboard.

2300 x 1100 x 500 area of outlet vents: 300 cm²

> MasterPact MTZ1 06-08 H1/H2/H3/L1

Type		MTZ1 06 H1/H2/H3/L1						MTZ1 08 H1/H2/H3/L1				
Switchboard composition												
Connection type												
Busbar dimensions (mm)		2b. 40 x 5						2b. 50 x 5				
Ventilated switchboard (➞ IP31)												
	T_a = 35 °C											
	5					630	630					800
	4				630	630	630				800	800
	3			630	630	630	630			800	800	800
	2	630	630	630	630	630	630	800	800	800	800	800
	1						630					
	T_a = 45 °C											
	5					630	630					800
	4				630	630	630				800	800
	3			630	630	630	630			800	800	800
	2	630	630	630	630	630	630	800	800	800	800	800
	1						630					
	T_a = 55 °C											
	5					630	630					800
	4				630	630	630				800	800
	3			630	630	630	630			800	800	800
	2	630	630	630	630	630	630	800	800	800	800	800
	1						630					
Non ventilated switchboard (➞ IP54)												
	T_a = 35 °C											
	5					630	630					800
	4				630	630	630				800	800
	3			630	630	630	630			800	800	800
	2	630	630	630	630	630	630	800	800	800	800	800
	1						630					
	T_a = 45 °C											
	5					630	630					800
	4				630	630	630				800	800
	3			630	630	630	630			800	800	800
	2	630	630	630	630	630	630	800	800	800	800	800
	1						630					
	T_a = 55 °C											
	5					630	630					800
	4				630	630	630				800	800
	3			630	630	630	630			800	800	800
	2	630	630	630	630	630	630	800	800	800	800	800
	1						630					

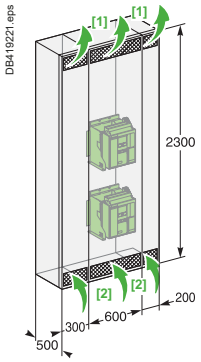

[1] Area of outlet vents: 300 cm²
[2] Area of inlet vents: 300 cm²

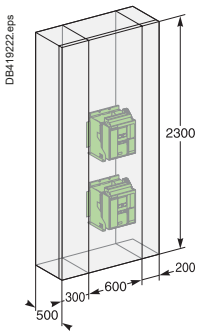

Factors in tables

- switchboard dimensions
- number of circuit breakers installed
- type of breaker connections
- drawout versions
- ambient temperature outside the switchboard: Ta (IEC 61439-1)

Factors affecting switchboard design

- The temperature around the circuit breaker and its connections is used to define the type of circuit breaker to be used and its connection arrangement.
- Vents at the top and bottom of the cubicles considerably reduce the temperature inside the switchboard, but must be designed so as to respect the degree of protection provided by the enclosure. For weatherproof heavy-duty cubicles, a forced ventilation system may be required.
- The heat dissipated by the devices installed in the switchboard is the heat dissipated by the circuit breakers under normal conditions (service current).
- The size of the enclosure determines the volume for cooling calculations.
- Switchboard installation mode: free-standing, against a wall, etc.
- Horizontal partitions can obstruct air circulation within the enclosure.

Note: The values indicated in these tables are extrapolated from test data and theoretical calculations.
These tables are only intended as a guide and cannot replace industrial experience or a temperature rise test.
The values indicated for the cross-sectional area of the vents should be considered as general indications only, given that the thermal performance of a switchboard with natural ventilation depends on many parameters, including shape, porosity, and location of vents and air flow within the switchboard.

Installation rules

Circuit breaker derating

2300 x 1100 x 500 area of outlet vents: 300 cm²

> MasterPact MTZ1 10-16 H1/H2/H3/L1

Type		MTZ1 10 H1/H2/H3/L1				MTZ1 12 H1/H2/H3				MTZ1 16 H1/H2/H3		
Switchboard composition		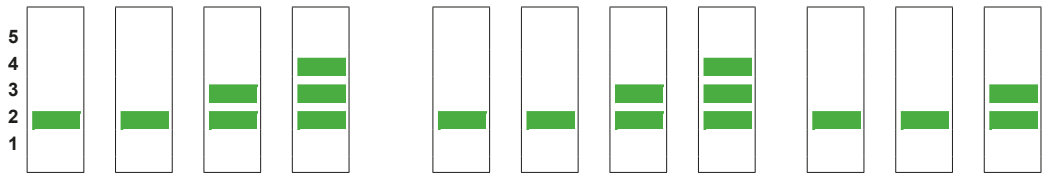										
Connection type		≡	|||	|||	|||	≡	|||	|||	|||	≡	|||	|||
Busbar dimensions (mm)		3b. 60 x 5				3b. 60 x 5				3b. 80 x 5		
			2b. 60 x 5				3b. 50 x 5				3b. 60 x 5	
Ventilated switchboard (➞ IP31)	5	H1/L1	H1/L1	H1/L1	H1/L1							
T_a = 35 °C	4				1000/1000				1250			
	3			1000/1000	1000/1000			1250	1250			1500
	2	1000/1000	1000/1000	1000/1000	1000/1000	1250	1250	1250	1250	1460	1600	1550
	1											
T_a = 45 °C	5											
	4				1000/1000				1250			
	3			1000/1000	1000/1000			1250	1250			1420
	2	1000/960	1000/1000	1000/1000	1000/1000	1250	1250	1250	1250	1400	1500	1480
	1											
T_a = 55 °C	5											
	4				1000/920				1250			
	3			1000/950	1000/930			1250	1250			1330
	2	1000/900	1000/1000	1000/970	1000/950	1250	1250	1250	1250	1300	1400	1370
	1											
Non ventilated switchboard (➞ IP54)	5											
T_a = 35 °C	4				1000/950				1250			
	3			1000/1000	1000/960			1250	1250			1370
	2	1000/1000	1000/1000	1000/1000	1000/970	1250	1250	1250	1250	1400	1500	1400
	5											
T_a = 45 °C	4				1000/900				1180			
	3			1000/950	1000/910			1250	1190			1300
	2	1000/950	1000/1000	1000/960	1000/930	1250	1250	1250	1220	1350	1430	1320
T_a = 55 °C	5											
	4				1000/850				1120			
	3			1000/900	1000/860			1200	1130			1210
	2	1000/880	1000/970	1000/910	1000/870	1210	1250	1210	1150	1250	1350	1250

DB419221.eps

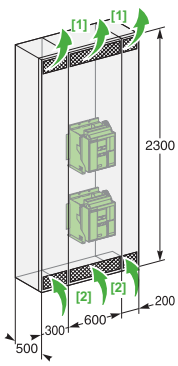

[1] Area of outlet vents: 300 cm²
[2] Area of inlet vents: 300 cm²

DB419222.eps

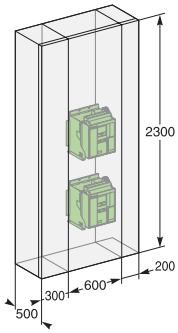

F

Factors in tables

- switchboard dimensions
- number of circuit breakers installed
- type of breaker connections
- drawout versions
- ambient temperature outside the switchboard: Ta (IEC 61439-1)

Factors affecting switchboard design

- The temperature around the circuit breaker and its connections is used to define the type of circuit breaker to be used and its connection arrangement.
- Vents at the top and bottom of the cubicles considerably reduce the temperature inside the switchboard, but must be designed so as to respect the degree of protection provided by the enclosure. For weatherproof heavy-duty cubicles, a forced ventilation system may be required.
- The heat dissipated by the devices installed in the switchboard is the heat dissipated by the circuit breakers under normal conditions (service current).
- The size of the enclosure determines the volume for cooling calculations.
- Switchboard installation mode: free-standing, against a wall, etc.
- Horizontal partitions can obstruct air circulation within the enclosure.

Note: The values indicated in these tables are extrapolated from test data and theoretical calculations.
These tables are only intended as a guide and cannot replace industrial experience or a temperature rise test.
The values indicated for the cross-sectional area of the vents should be considered as general indications only, given that the thermal performance of a switchboard with natural ventilation depends on many parameters, including shape, porosity, and location of vents and air flow within the switchboard.

2300 x 800 x 900 area of outlet vents: 350 cm²

> MasterPact MTZ2 08-10 N1/H1/H2/L1/H10

Type		MTZ2 08 N1/H1/H2/L1/H10					MTZ2 10 N1/H1/H2/L1/H10			
Switchboard composition										
Connection type										
Busbar dimensions (mm)		2b. 50 x 5					3b. 60 x 5	2b. 60 x 5		
Ventilated switchboard (→ IP31)										
		4				800				
		3			800	800				1000
	T_a = 35 °C	2		800	800	800			1000	1000
		1	800	800	800	800	800	1000	1000	1000	1000
		4				800				
		3			800	800				1000
	T_a = 45 °C	2		800	800	800			1000	1000
		1	800	800	800	800	800	1000	1000	1000	1000
		4				800				
		3			800	800				1000
	T_a = 55 °C	2		800	800	800			1000	1000
		1	800	800	800	800	800	1000	1000	1000	1000

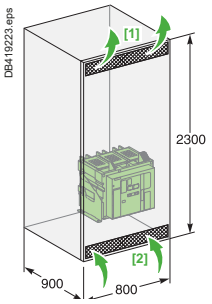

[1] Area of outlet vents: 350 cm².
[2] Area of inlet vents: 350 cm².

Non ventilated switchboard (→ IP54)										
		4				800				
		3			800	800				1000
	T_a = 35 °C	2		800	800	800			1000	1000
		1	800	800	800	800	800	1000	1000	1000	1000
		4				800				
		3			800	800				1000
	T_a = 45 °C	2		800	800	800			1000	1000
		1	800	800	800	800	800	1000	1000	1000	1000
		4				800				
		3			800	800				1000
	T_a = 55 °C	2		800	800	800			1000	1000
		1	800	800	800	800	800	1000	1000	1000	1000

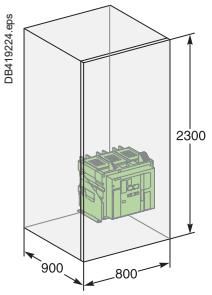

Factors in tables

- switchboard dimensions
- number of circuit breakers installed
- type of breaker connections
- drawout versions
- ambient temperature outside the switchboard: Ta (IEC 61439-1)

Factors affecting switchboard design

- The temperature around the circuit breaker and its connections is used to define the type of circuit breaker to be used and its connection arrangement.
- Vents at the top and bottom of the cubicles considerably reduce the temperature inside the switchboard, but must be designed so as to respect the degree of protection provided by the enclosure. For weatherproof heavy-duty cubicles, a forced ventilation system may be required.
- The heat dissipated by the devices installed in the switchboard is the heat dissipated by the circuit breakers under normal conditions (service current).
- The size of the enclosure determines the volume for cooling calculations.
- Switchboard installation mode: free-standing, against a wall, etc.
- Horizontal partitions can obstruct air circulation within the enclosure.

Note: The values indicated in these tables are extrapolated from test data and theoretical calculations.
These tables are only intended as a guide and cannot replace industrial experience or a temperature rise test.
The values indicated for the cross-sectional area of the vents should be considered as general indications only, given that the thermal performance of a switchboard with natural ventilation depends on many parameters, including shape, porosity, and location of vents and air flow within the switchboard.

Installation rules

Circuit breaker derating

2300 x 800 x 900 area of outlet vents: 350 cm²

> MasterPact MTZ2 12-16 N1/H1/H2/L1/H10

Type		MTZ2 12 N1				MTZ2 12 H1/H2/L1/H10				MTZ2 16 N1			MTZ2 16 H1/H2/L1/H10		
Switchboard composition															
Connection type															
Busbar dimensions (mm)		3b. 60 x 5				3b. 60 x 5				3b. 80 x 5			3b. 80 x 5		
			3b. 50 x 5				3b. 50 x 5				3b. 60 x 5			3b. 60 x 5	
Ventilated switchboard (→ IP31)	4														
	3				1250				1250						
T_a = 35 °C	2			1250	1250			1250	1250			1600			1600
	1	1250	1250	1250	1250	1250	1250	1250	1250	1550	1600	1600	1600	1600	1600
	4														
	3				1250				1250						
T_a = 45 °C	2			1250	1250			1250	1250			1500			1600
	1	1250	1250	1250	1250	1250	1250	1250	1250	1470	1600	1600	1600	1600	1600
	4														
	3				1250				1250						
T_a = 55 °C	2			1250	1250			1250	1250			1380			1470
	1	1250	1250	1250	1250	1250	1250	1250	1250	1380	1500	1500	1520	1600	1600

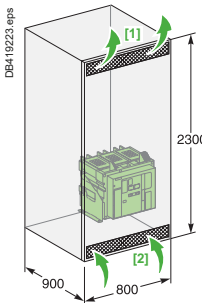

[1] Area of outlet vents: 350 cm²
[2] Area of inlet vents: 350 cm²

Non ventilated switchboard (→ IP54)	4														
	3				1240				1250						
T_a = 35 °C	2			1250	1250			1250	1250			1425			1600
	1	1250	1250	1250	1250	1250	1250	1250	1250	1440	1550	1550	1600	1600	1600
	4														
	3				1170				1250						
T_a = 45 °C	2			1210	1210			1250	1250			1360			1500
	1	1200	1250	1250	1250	1250	1250	1250	1250	1360	1470	1470	1500	1600	1600
	4														
	3				1100				1250						
T_a = 55 °C	2			1140	1170			1250	1250			1280			1400
	1	1130	1200	1200	1200	1250	1250	1250	1250	1280	1380	1380	1400	1520	1520

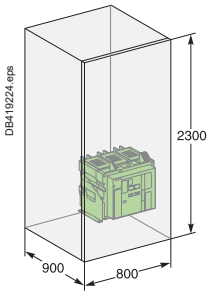

F

Factors in tables

- switchboard dimensions
- number of circuit breakers installed
- type of breaker connections
- drawout versions
- ambient temperature outside the switchboard: Ta (IEC 61439-1)

Factors affecting switchboard design

- The temperature around the circuit breaker and its connections is used to define the type of circuit breaker to be used and its connection arrangement.
- Vents at the top and bottom of the cubicles considerably reduce the temperature inside the switchboard, but must be designed so as to respect the degree of protection provided by the enclosure. For weatherproof heavy-duty cubicles, a forced ventilation system may be required.
- The heat dissipated by the devices installed in the switchboard is the heat dissipated by the circuit breakers under normal conditions (service current).
- The size of the enclosure determines the volume for cooling calculations.
- Switchboard installation mode: free-standing, against a wall, etc.
- Horizontal partitions can obstruct air circulation within the enclosure.

Note: The values indicated in these tables are extrapolated from test data and theoretical calculations.
These tables are only intended as a guide and cannot replace industrial experience or a temperature rise test.
The values indicated for the cross-sectional area of the vents should be considered as general indications only, given that the thermal performance of a switchboard with natural ventilation depends on many parameters, including shape, porosity, and location of vents and air flow within the switchboard.

2300 x 800 x 900 area of outlet vents: 350 cm²

> MasterPact MTZ2 20-40 N1/H1/H2/L1/H10

Type		MTZ2 20 N1/H1/H2/H3/H10			MTZ2 20 L1			MTZ2 25 H1/H2/H3/H10		MTZ2 32 H1/H2/H3/H10		MTZ2 40 H1/H2/H3/H10	
Switchboard composition													
Connection type													
Busbar dimensions (mm)		3b. 100 x 5			3b. 100 x 5			4b. 100 x 5		3b. 100 x 10		4b. 100 x 10	
Ventilated switchboard (→ IP31)													
	4												
	3			2000			1830						
T_a = 35 °C	**2**	2000	2000	2000	2000	2000	2000	2375	2500	3040	3200	3320	3700
	1												
	4												
	3			2000			1750						
T_a = 45 °C	**2**	2000	2000	2000	1810	1960	1920	2250	2380	2880	3100	3160	3500
	1												
	4												
	3			2000			1640						
T_a = 55 °C	**2**	2000	2000	2000	1700	1850	1800	2100	2250	2690	2900	2960	3280
	1												

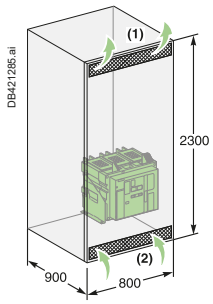

[1] Area of outlet vents: 350 cm².
[2] Area of inlet vents: 350 cm².

Non ventilated switchboard (→ IP54)	**4**												
	3			2000			1750						
T_a = 35 °C	**2**	2000	2000	2000	1800	1900	1890	2125	2275	2650	2850	3040	3320
	1												
	4												
	3			1900			1660						
T_a = 45 °C	**2**	1900	1960	1960	1680	1810	1800	2000	2150	2550	2700	2880	3120
	1												
	4												
	3			1780			1550						
T_a = 55 °C	**2**	1800	1920	1920	1590	1700	1700	1900	2020	2370	2530	2720	2960
	1												

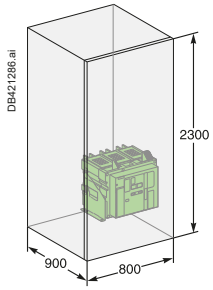

Factors in tables

- switchboard dimensions
- number of circuit breakers installed
- type of breaker connections
- drawout versions
- ambient temperature outside the switchboard: Ta (IEC 61439-1)

Factors affecting switchboard design

- The temperature around the circuit breaker and its connections is used to define the type of circuit breaker to be used and its connection arrangement.
- Vents at the top and bottom of the cubicles considerably reduce the temperature inside the switchboard, but must be designed so as to respect the degree of protection provided by the enclosure. For weatherproof heavy-duty cubicles, a forced ventilation system may be required.
- The heat dissipated by the devices installed in the switchboard is the heat dissipated by the circuit breakers under normal conditions (service current).
- The size of the enclosure determines the volume for cooling calculations.
- Switchboard installation mode: free-standing, against a wall, etc.
- Horizontal partitions can obstruct air circulation within the enclosure.

Note: The values indicated in these tables are extrapolated from test data and theoretical calculations.
These tables are only intended as a guide and cannot replace industrial experience or a temperature rise test.
The values indicated for the cross-sectional area of the vents should be considered as general indications only, given that the thermal performance of a switchboard with natural ventilation depends on many parameters, including shape, porosity, and location of vents and air flow within the switchboard.

Installation rules

Circuit breaker derating

2300 x 1400 x 1500 area of outlet vents: 500 cm²

> MasterPact MTZ3 40-63 H1/H2

Type			MTZ3 40 H1/H2		MTZ3 50 H1/H2		MTZ3 63 H1/H2
Switchboard composition							
Connection type							
Busbar dimensions (mm)			5b. 100 x 10		7b. 100 x 10		8b. 100 x 10
Ventilated switchboard (→ IP31)		4					
		3					
	T_a = 35 °C	2	4000	4000	4700	5000	5850
		1					
		4					
		3					
	T_a = 45 °C	2	4000	4000	4450	4850	5670
		1					
		4					
		3					
	T_a = 55 °C	2	4000	4000	4200	4600	5350
		1					
Non ventilated switchboard (→ IP54)		4					
		3					
	T_a = 35 °C	2	4000	4000	4350	4650	5290
		1					
		4					
		3					
	T_a = 45 °C	2	4000	4000	4100	4400	5040
		1					
		4					
		3					
	T_a = 55 °C	2	3840	3840	3850	4150	4730
		1					

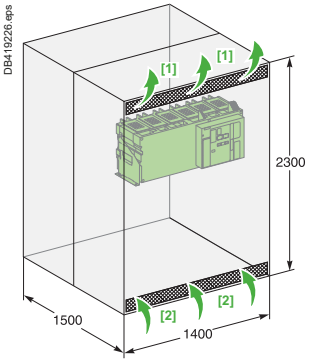

[1] Area of outlet vents: 500 cm²
[2] Area of inlet vents: 500 cm²

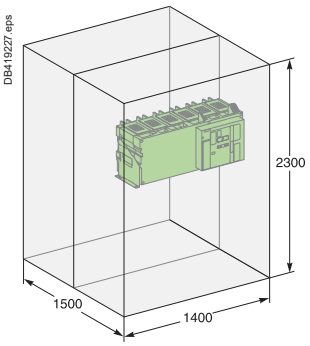

F

Factors in tables

- switchboard dimensions
- number of circuit breakers installed
- type of breaker connections
- drawout versions
- ambient temperature outside the switchboard: Ta (IEC 61439-1).

Factors affecting switchboard design

- The temperature around the circuit breaker and its connections is used to define the type of circuit breaker to be used and its connection arrangement.
- Vents at the top and bottom of the cubicles considerably reduce the temperature inside the switchboard, but must be designed so as to respect the degree of protection provided by the enclosure. For weatherproof heavy-duty cubicles, a forced ventilation system may be required.
- The heat dissipated by the devices installed in the switchboard is the heat dissipated by the circuit breakers under normal conditions (service current).
- The size of the enclosure determines the volume for cooling calculations.
- Switchboard installation mode: free-standing, against a wall, etc.
- Horizontal partitions can obstruct air circulation within the enclosure.

Note: The values indicated in these tables are extrapolated from test data and theoretical calculations.
These tables are only intended as a guide and cannot replace industrial experience or a temperature rise test.
The values indicated for the cross-sectional area of the vents should be considered as general indications only, given that the thermal performance of a switchboard with natural ventilation depends on many parameters, including shape, porosity, and location of vents and air flow within the switchboard.

Dimensions

MasterPact MTZ1 Fixed 3/4-pole devices

Dimensions

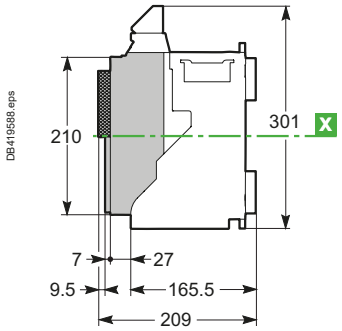

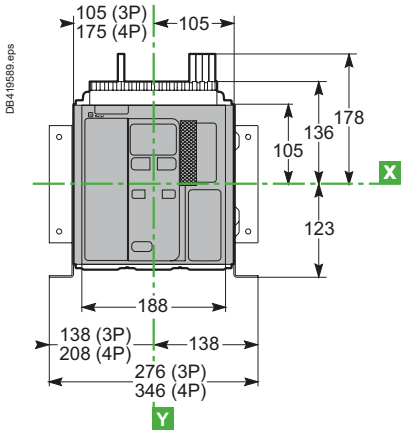

Mounting on base plate or rails

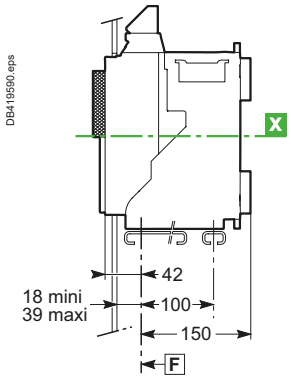

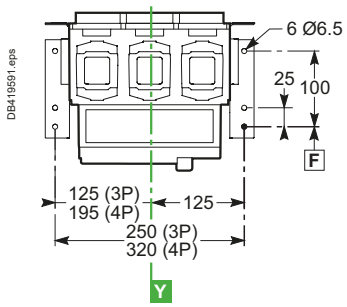

Mounting detail

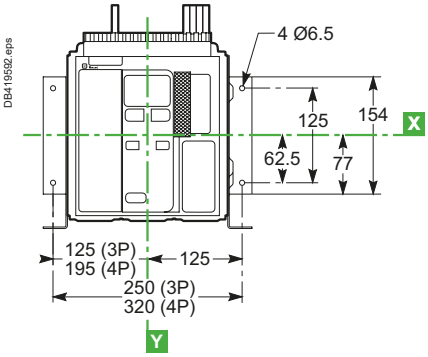

Safety clearances

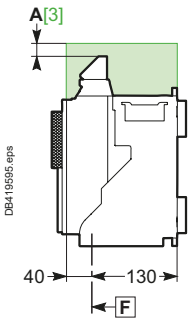

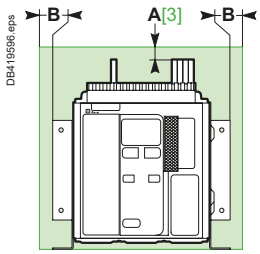

Door cutout

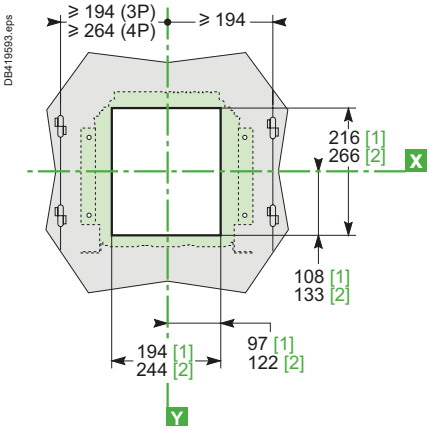

Rear panel cutout

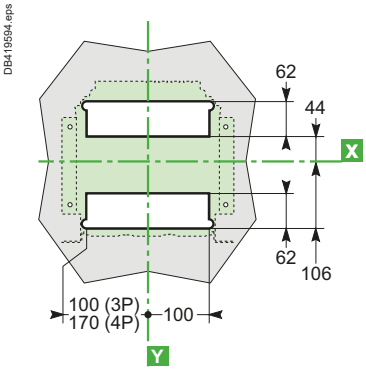

	Insulated parts	Metal parts	Energized parts
A	0	0	100
B	0	0	60

[1] Without escutcheon.
[2] With escutcheon.
[3] An overhead clearance of 50 mm is required to remove the arc chutes.
An overhead clearance of 20 mm is required to remove the terminal block.

Note: F Datum, circuit breaker or chassis mounting hole.
X and Y are the symmetry planes for a 3-pole device.

F

Dimensions

MasterPact MTZ1 Fixed 3/4-pole devices

Connections

Horizontal rear connection

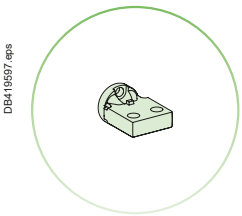

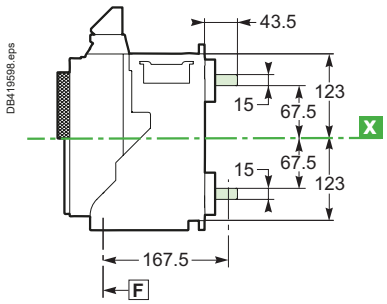

Details

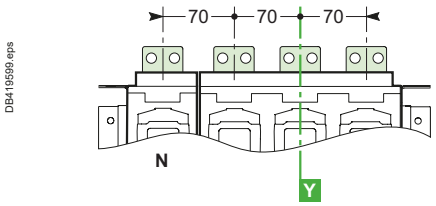

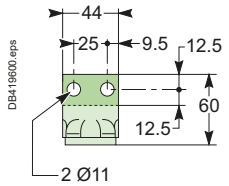

Vertical rear connection

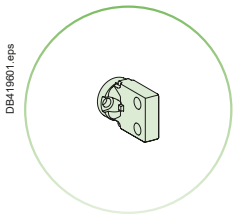

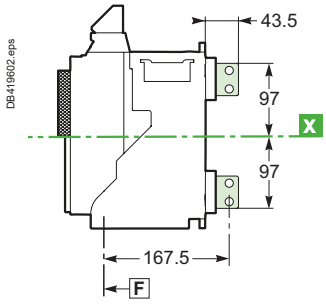

Details

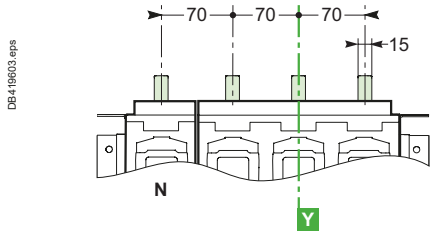

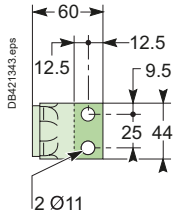

Front connection

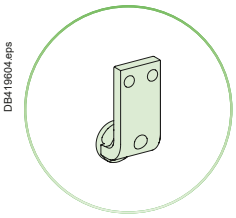

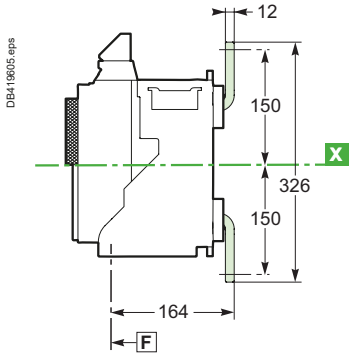

Details

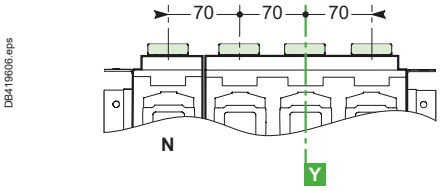

Top connection

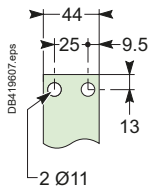

Bottom connection

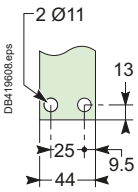

Notes: Recommended connection screws: M10 Class 8.8.
Tightening torque: 50 Nm with contact washer.

Dimensions

MasterPact MTZ1 Fixed 3/4-pole devices

Connections

Front connection with spreaders

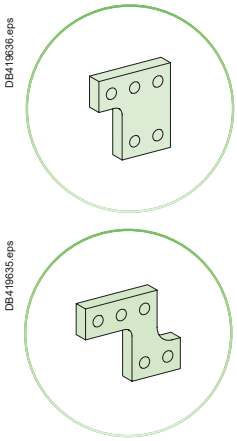

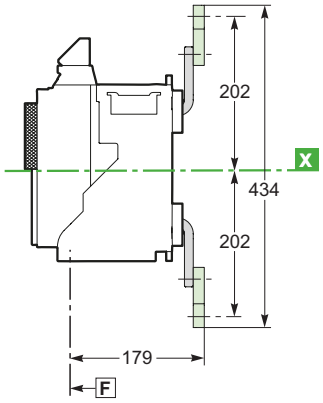

Details

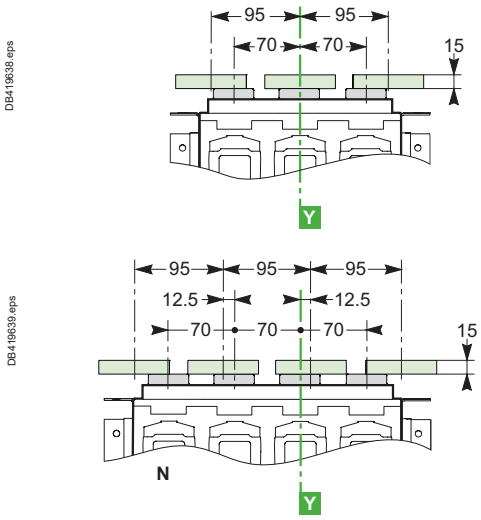

Rear connection with spreaders

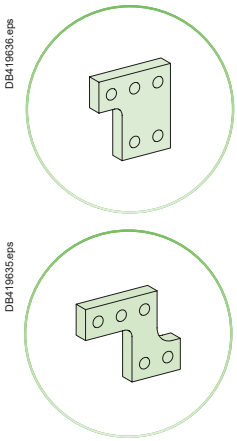

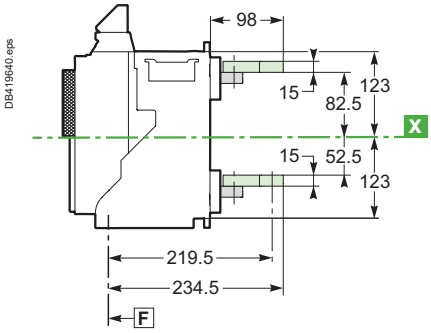

Details

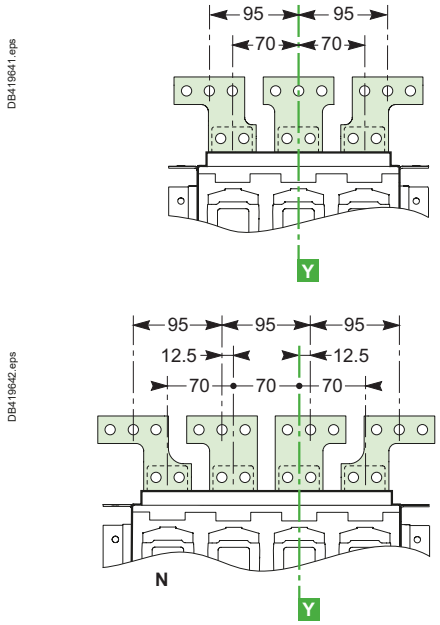

Spreader detail

Middle left or middle right spreader for 4P

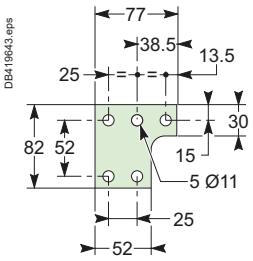

Middle spreader for 3P

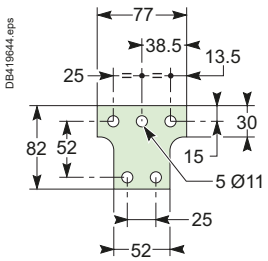

Left or right spreader for 4P

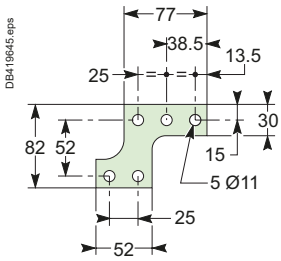

Left or right spreader for 3P

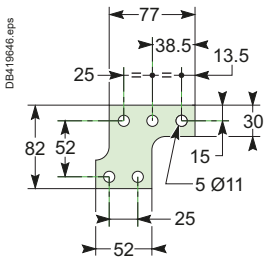

Note: F Datum, circuit breaker or chassis mounting hole.
X and Y are the symmetry planes for a 3-pole device.

Dimensions

MasterPact MTZ1 Fixed 3/4-pole devices

Connections

Front connection via vertical connection adapters oriented to the rear

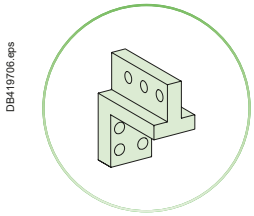

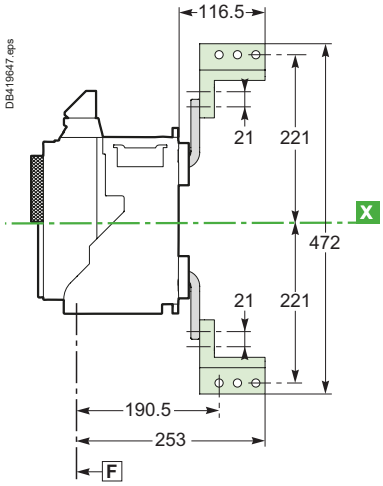

Details

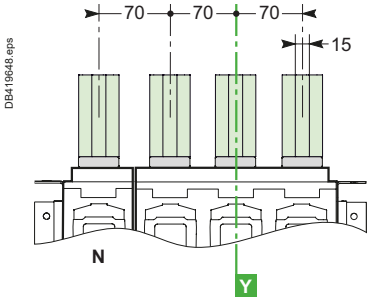

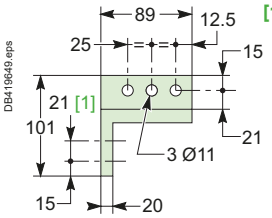

[1] 2 connection possibilities on vertical connection adapters (21 mm between centers).

Front connection via vertical connection adapters fitted with cable-lug adapters oriented to the rear

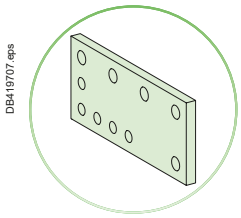

Notes: Recommended connection screws: M10 Class 8.8. Tightening torque: 50 Nm with contact washer.

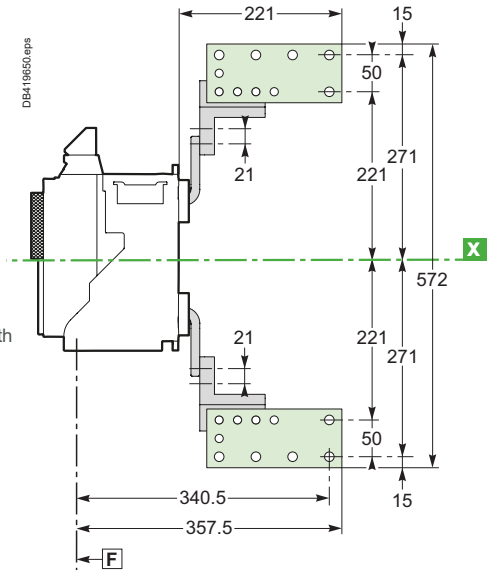

Details

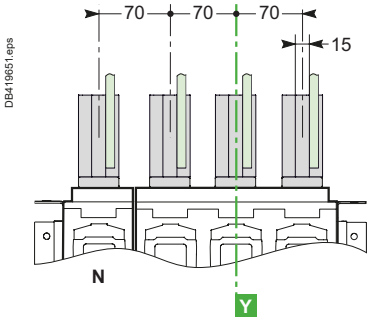

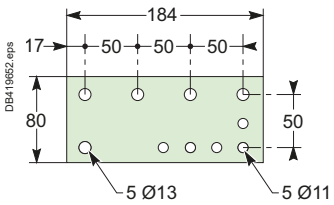

Spacers (kit 04691)

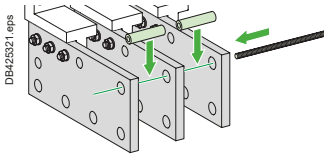

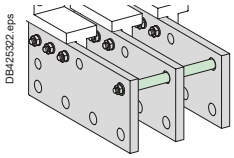

Spacers must be mounted between the cable lug adapters to withstand the electrodynamic stresses in the event of a short-circuit.

Connections

Front connection via vertical connection adapters oriented to the front

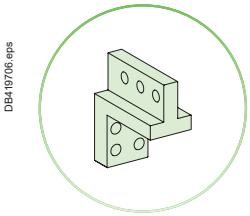

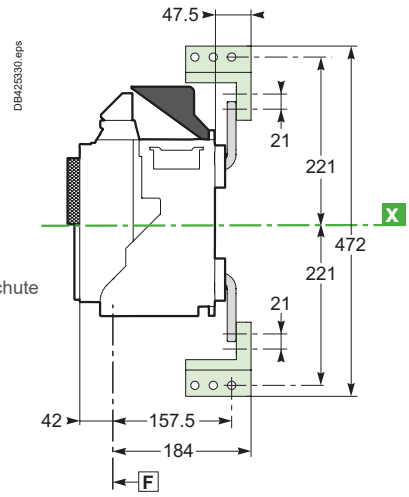

Notes: For this connection the arc chute screen is mandatory.

Details

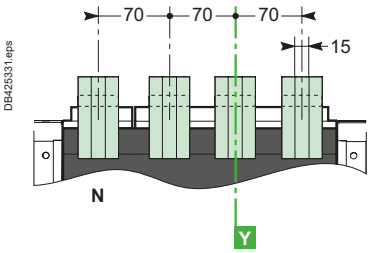

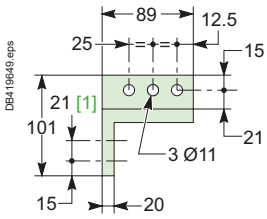

[1] 2 connection possibilities on vertical connection adapters (21 mm between centers).

Front connection via vertical connection adapters fitted with cable-lug adapters oriented to the front

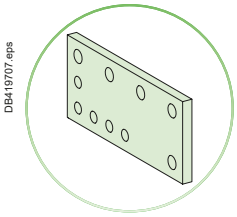

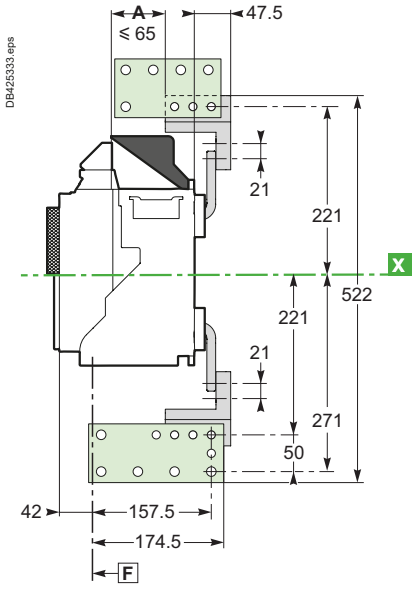

Notes:
- For this connection the arc chute screen is mandatory.
- Third party cable-lug adapters mounted on front-facing vertical connection adapters above arc chutes must not exceed the maximum distance **A**.
- Recommended connection screws: M10 Class 8.8.
Tightening torque: 50 Nm with contact washer.

Details

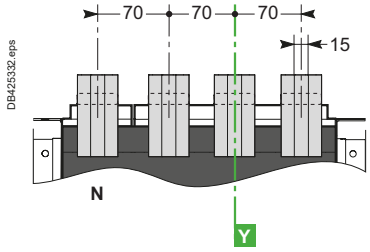

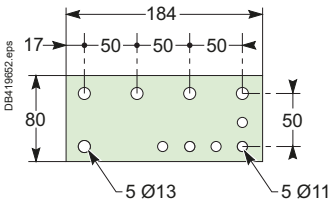

Spacers (kit 04691)

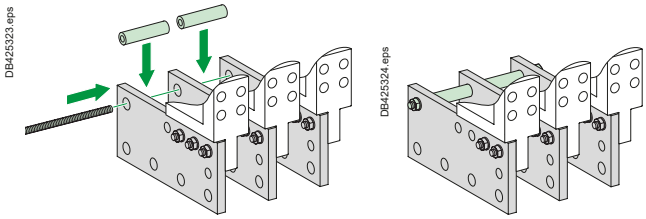

Spacers must be mounted between the cable lug adapters to withstand the electrodynamic stresses in the event of a short-circuit.

F

Dimensions

MasterPact MTZ1 Drawout 3/4-pole devices

Dimensions

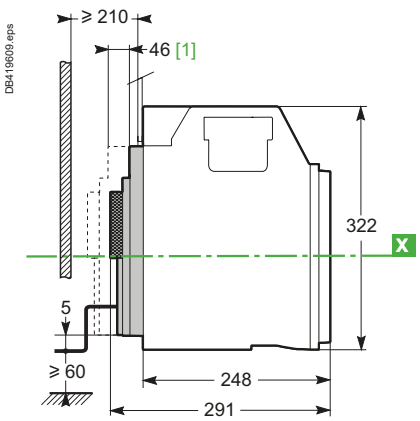

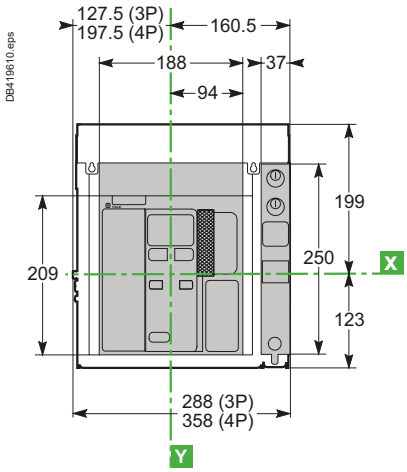

Safety clearances

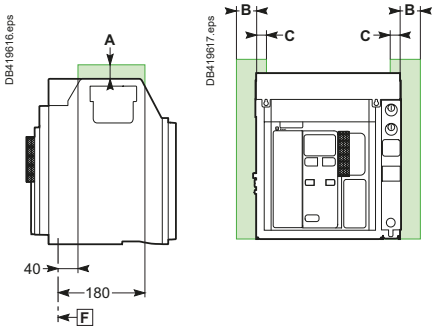

	Insulated parts	Metal parts	Energized parts
A	0	0	30
B	10	10	60
C	0	0	30

Mounting on base plate or rails

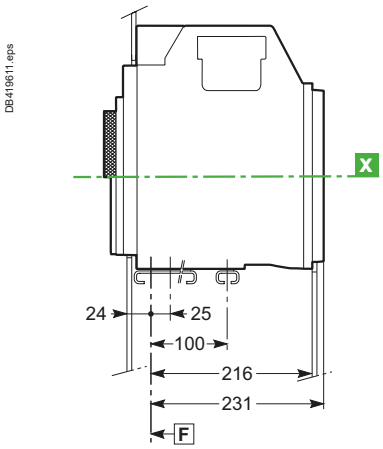

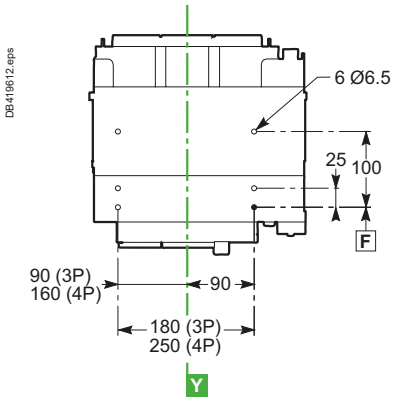

Mounting detail

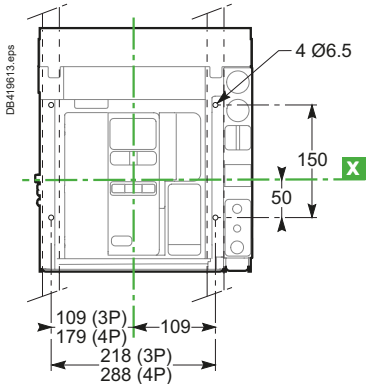

Door cutout without escutcheon

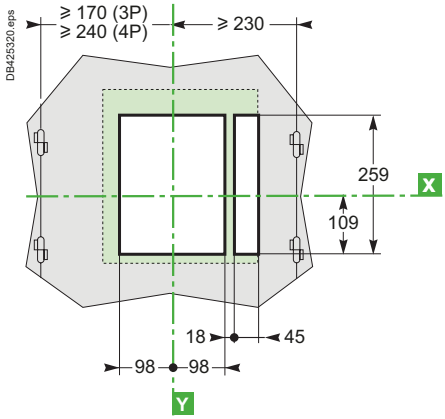

Door cutout with escutcheon

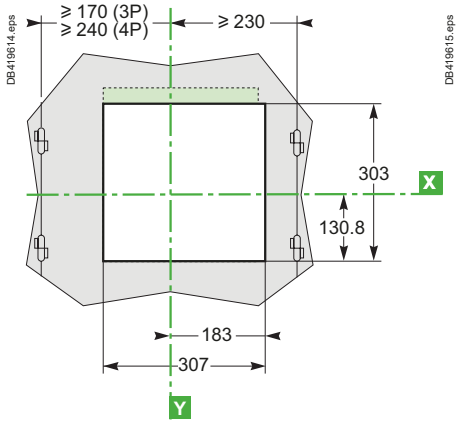

Rear panel cutout

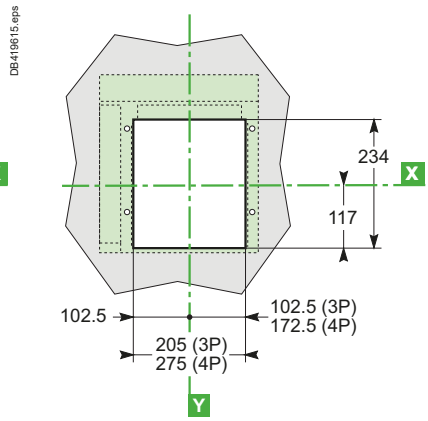

[1] Disconnected position.
Note: F Datum, circuit breaker or chassis mounting hole.
X and Y are the symmetry planes for a 3-pole device.

Dimensions

MasterPact MTZ1 Drawout 3/4-pole devices

Connections

Horizontal rear connection

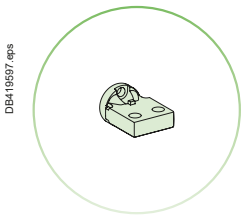

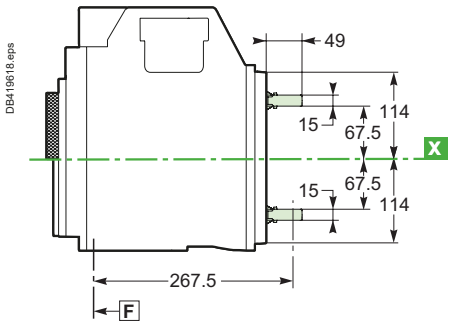

Details

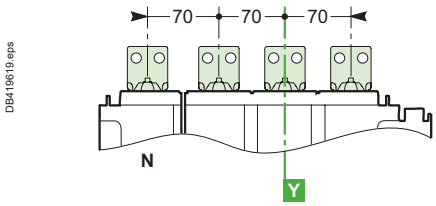

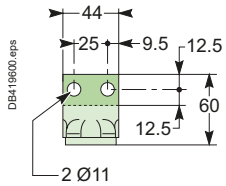

Vertical rear connection

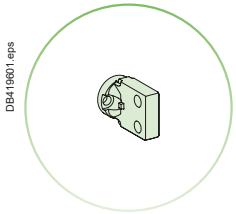

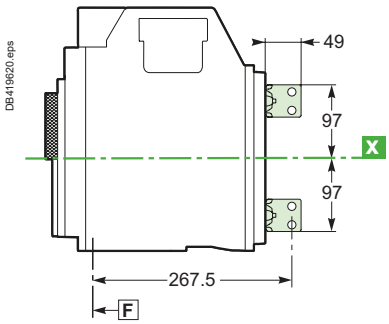

Details

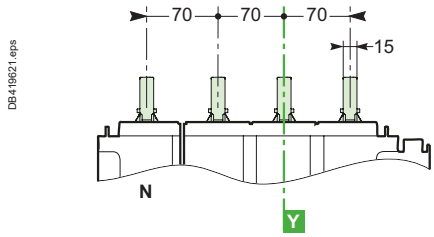

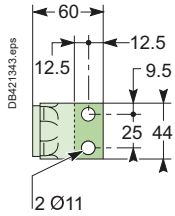

Front connection

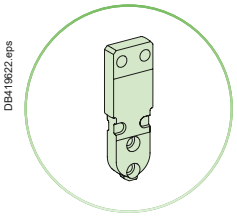

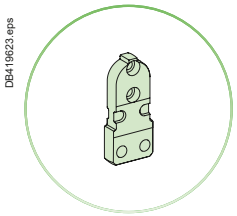

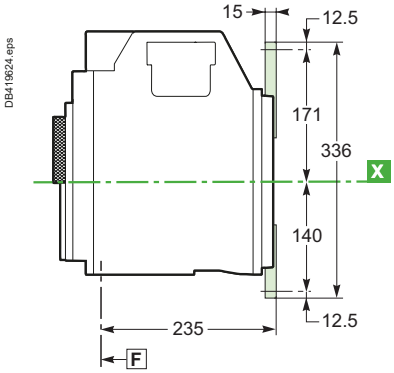

Details

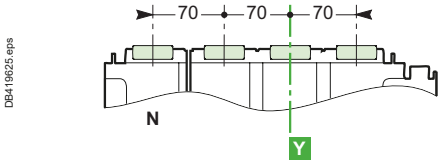

Top connection

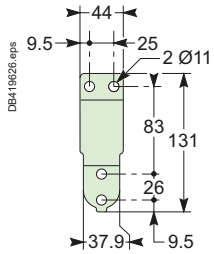

Bottom connection

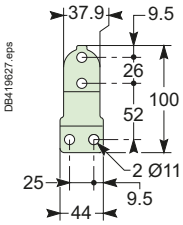

Notes: Recommended connection screws: M10 Class 8.8.
Tightening torque: 50 Nm with contact washer.

Dimensions

MasterPact MTZ1 Drawout 3/4-pole devices

Connections

Front connection with spreaders

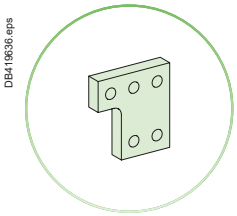

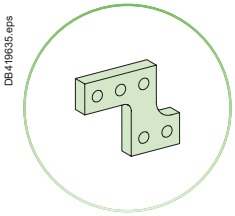

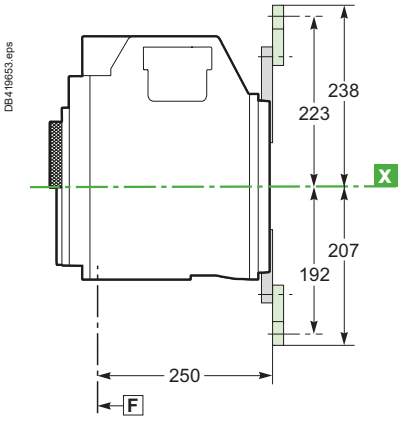

Details

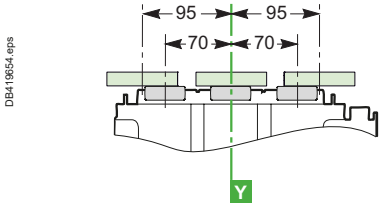

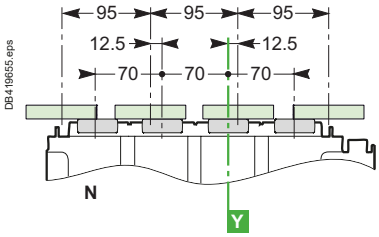

Spreader detail

Middle left or middle right spreader for 4P

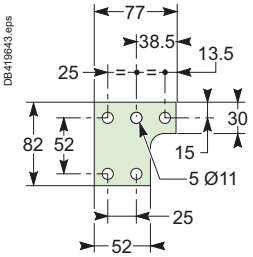

Middle spreader for 3P

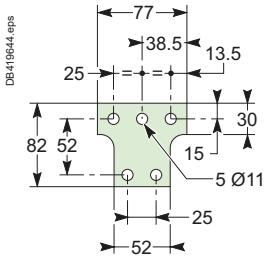

Left or right spreader for 4P

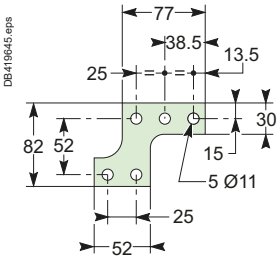

Left or right spreader for 3P

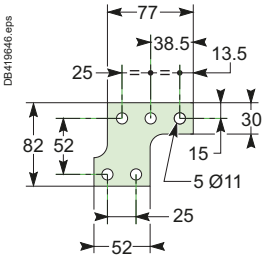

Note: F Datum, circuit breaker or chassis mounting hole.
X and Y are the symmetry planes for a 3-pole device.

Dimensions

MasterPact MTZ1 Drawout 3/4-pole devices

Connections

Vertical connection adapters fitted with cable-lug adapters oriented to the front

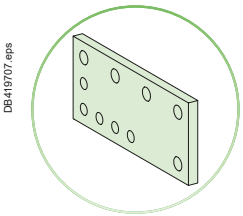

Notes:
Recommended connection screws:
M10 Class 8.8.
Tightening torque: 50 Nm
with contact washer.

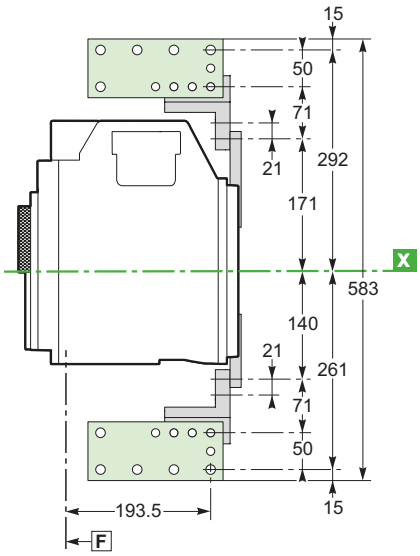

Details

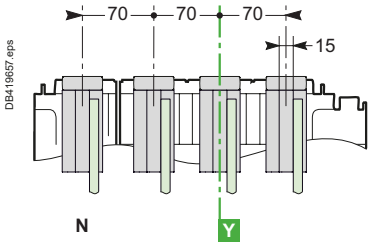

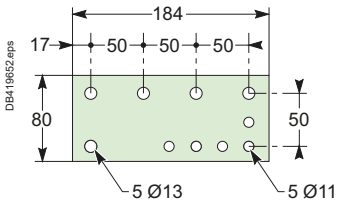

Spacers (kit 04691)

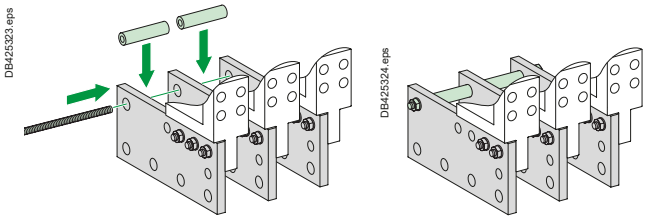

Spacers must be mounted between the cable lug adapters to withstand the electrodynamic stresses in the event of a short-circuit.

Vertical connection adapters fitted with cable-lug adapters oriented to the rear

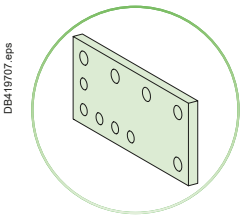

Notes:
Recommended connection screws:
M10 Class 8.8.
Tightening torque: 50 Nm
with contact washer.

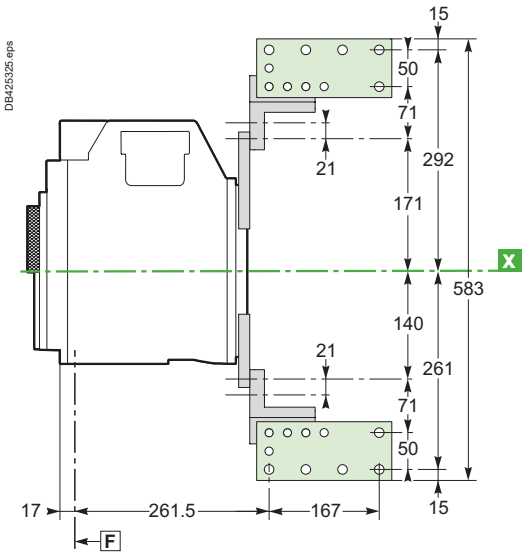

Details

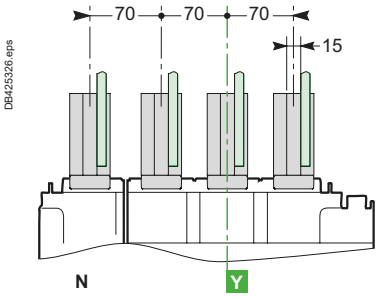

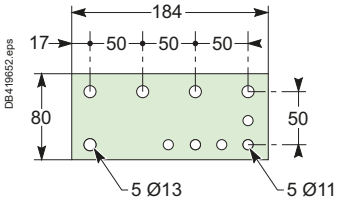

Spacers (kit 04691)

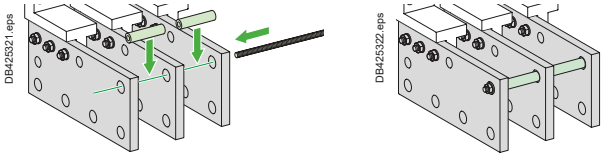

Spacers must be mounted between the cable lug adapters to withstand the electrodynamic stresses in the event of a short-circuit.

F

Dimensions

MasterPact MTZ2 08 to MTZ2 32 Fixed 3/4-pole devices

Dimensions

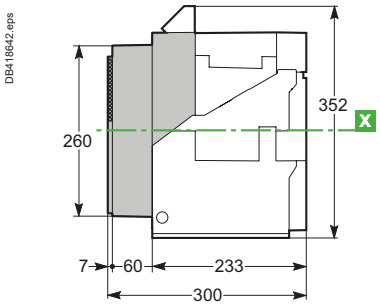

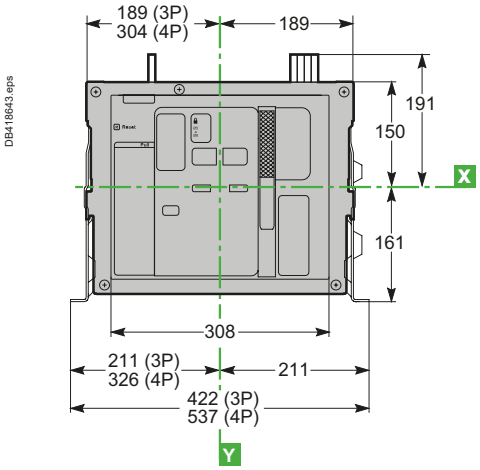

Mounting on base plate or rails

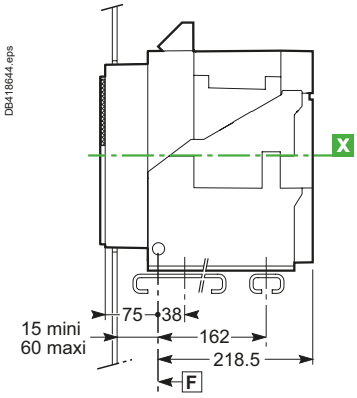

Mounting detail

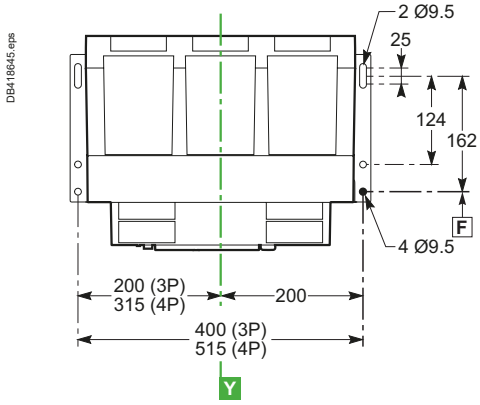

Door cutout

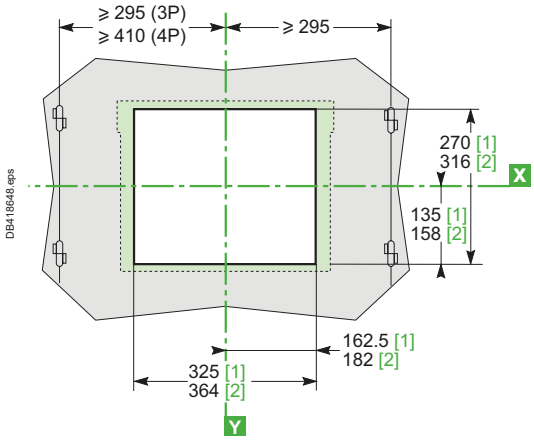

Safety clearances

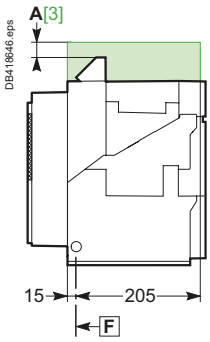

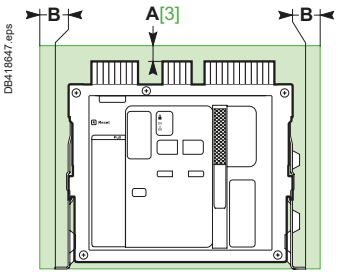

[1] Without escutcheon.
[2] With escutcheon.
[3] An overhead clearance of 110 mm is required to remove the arc chutes.
An overhead clearance of 20 mm is required to remove the terminal block.

Note: F Datum, circuit breaker or chassis mounting hole.
X and Y are the symmetry planes for a 3-pole device.

	Insulated parts	Metal parts	Energized parts
A	0	0	100
B	0	0	60

Dimensions

MasterPact MTZ2 08 to MTZ2 32 Fixed 3/4-pole devices

Connections

Horizontal rear connection

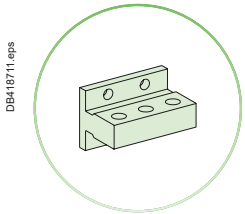

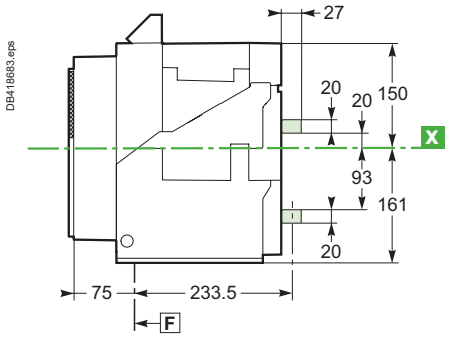

Details

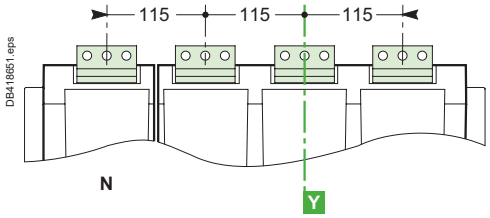

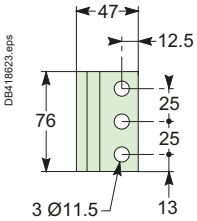

Vertical rear connection

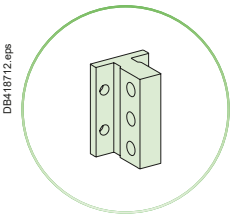

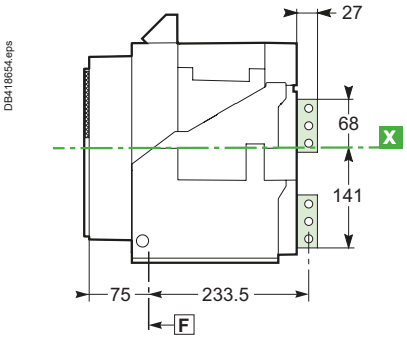

Details

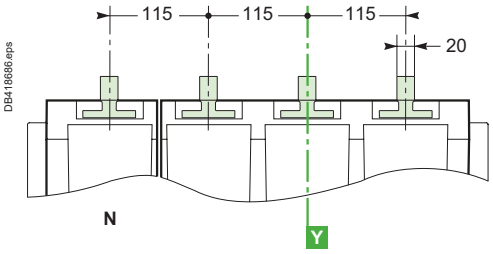

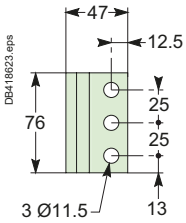

Front connection

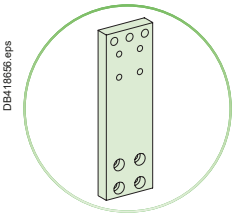

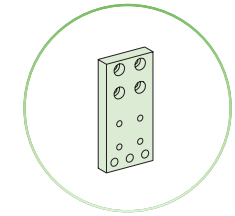

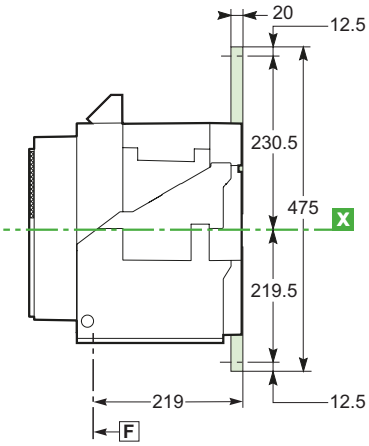

Note: Recommended connection screws: M10 Class 8.8.
Tightening torque: 50 Nm with contact washer.

Details

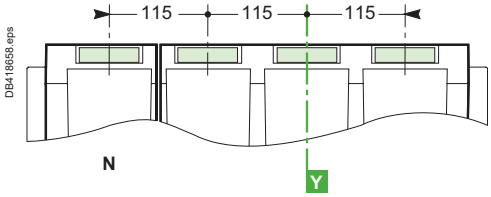

Top connection

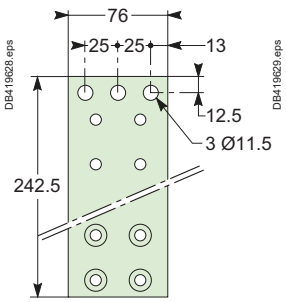

Bottom connection

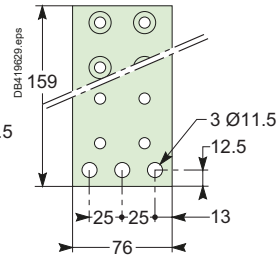

Dimensions

MasterPact MTZ2 08 to MTZ2 32 Drawout 3/4-pole devices

Dimensions

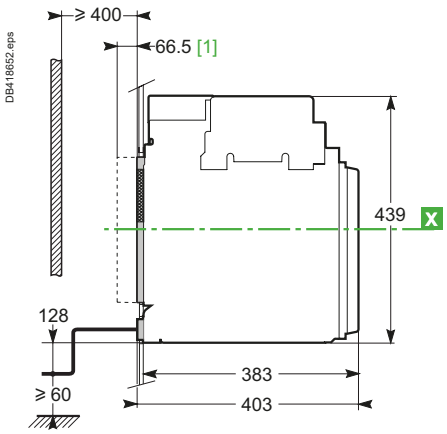

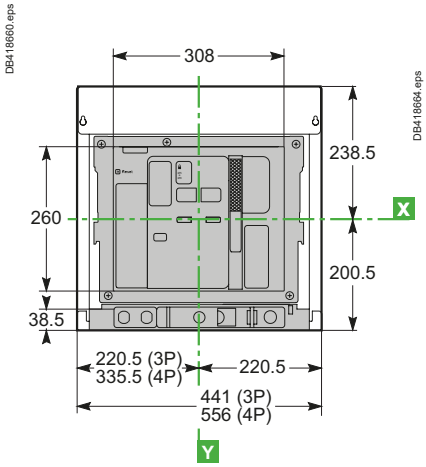

Safety clearances

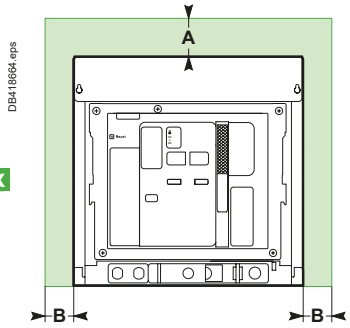

	Insulated parts	Metal parts	Energized parts
A	0	0	0
B	0	0	60

The safety clearances take into account the space required to remove the arc chutes.

Mounting on base plate or rails

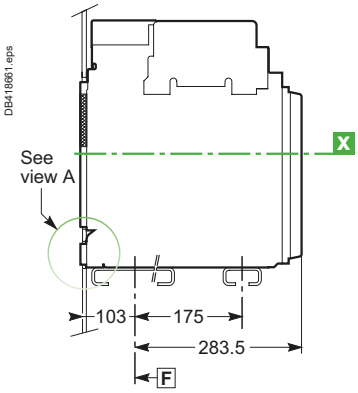

Mounting detail

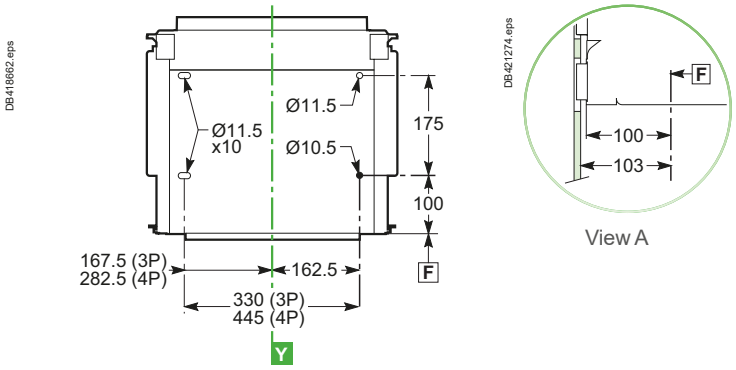

Door cutout without escutcheon

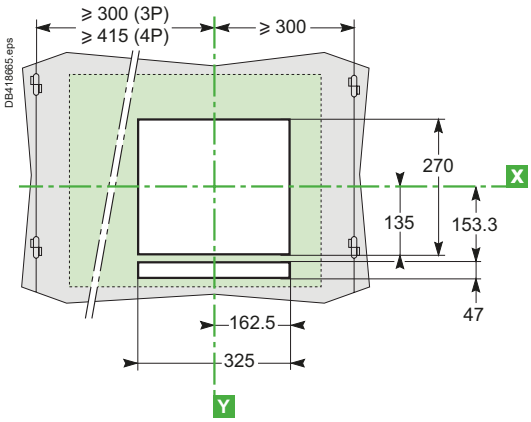

Door cutout with escutcheon

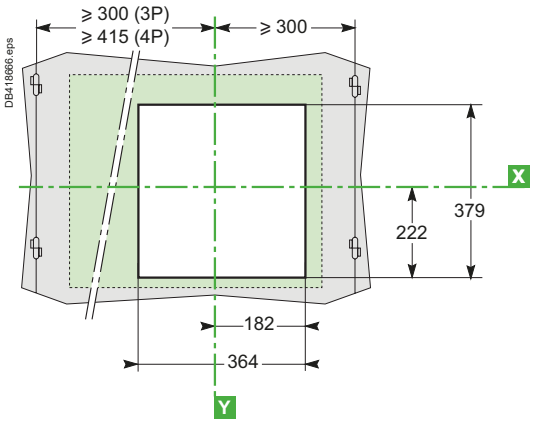

[1] Disconnected position.

Note: F Datum, circuit breaker or chassis mounting hole.
X and Y are the symmetry planes for a 3-pole device.

Dimensions

MasterPact MTZ2 08 to MTZ2 32 Drawout 3/4-pole devices

Connections

Horizontal rear connection

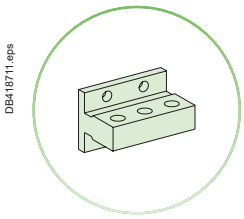

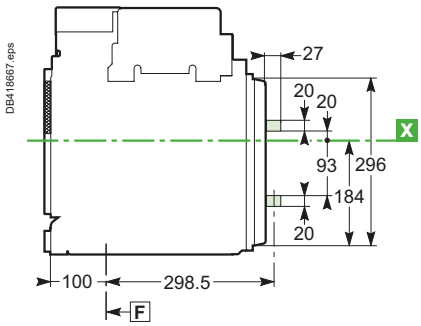

Details

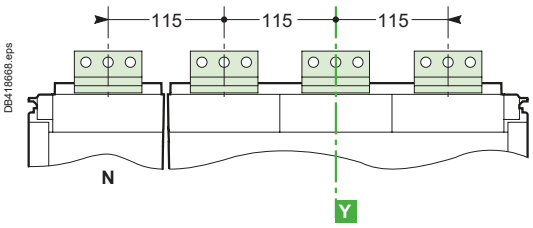

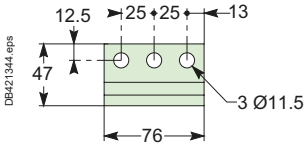

Vertical rear connection

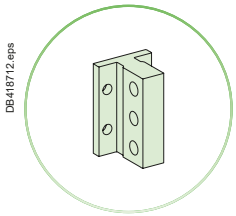

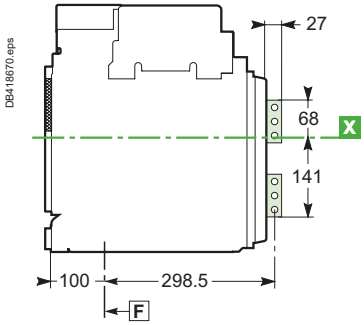

Details

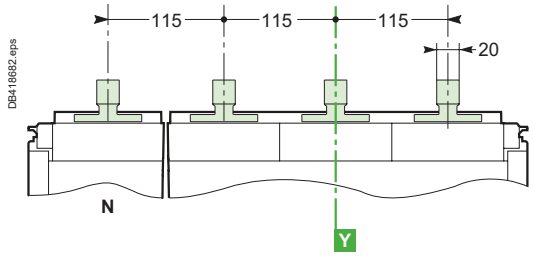

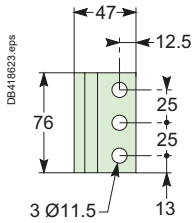

Front connection

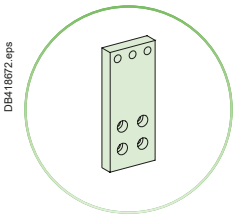

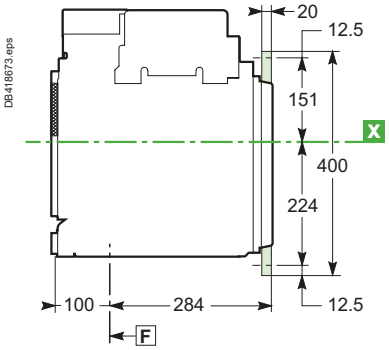

Details

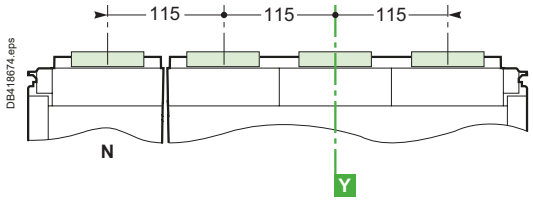

Top connection

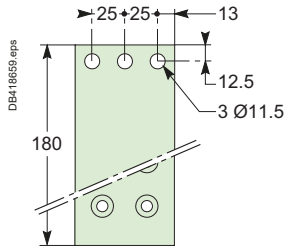

Bottom connection

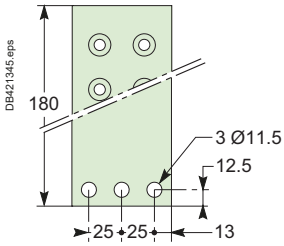

Note: Recommended connection screws: M10 Class 8.8.
Tightening torque: 50 Nm with contact washer.

Dimensions

MasterPact MTZ2 40 Fixed 3/4-pole devices

Dimensions

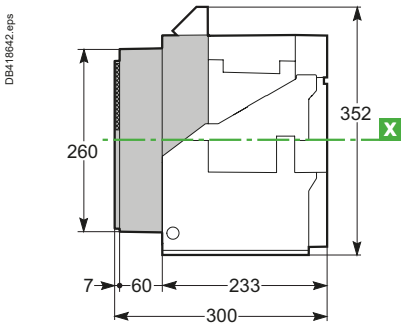

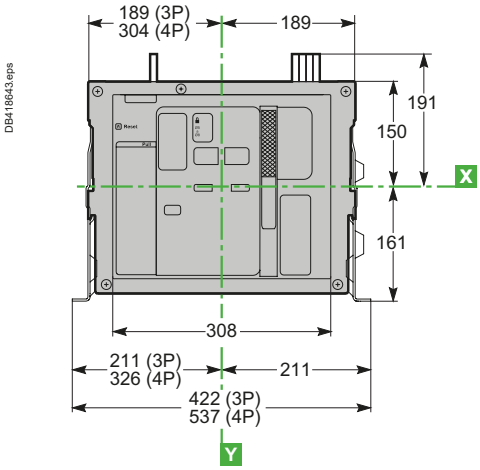

Mounting on base plate or rails

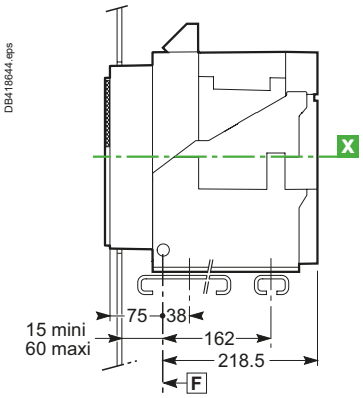

Mounting detail

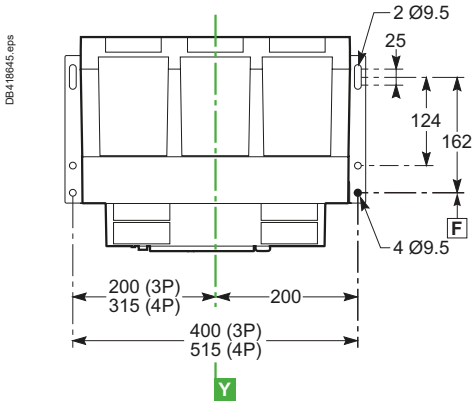

Door cutout

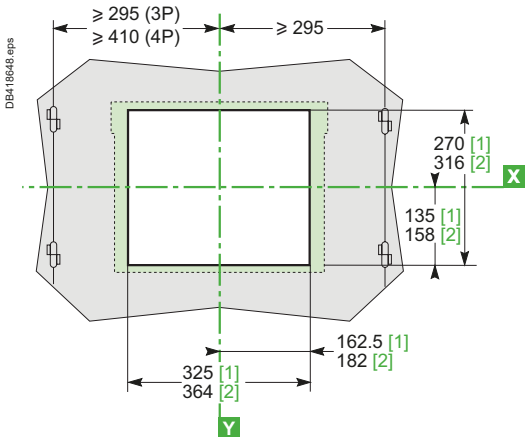

Safety clearances

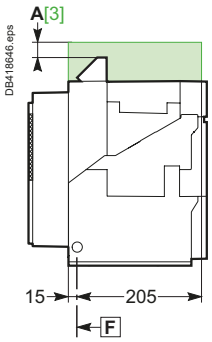

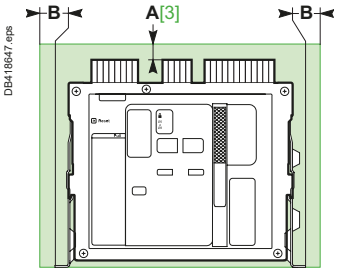

[1] Without escutcheon.
[2] With escutcheon.
[3] An overhead clearance of 110 mm is required to remove the arc chutes.
An overhead clearance of 20 mm is required to remove the terminal block.
Note: F Datum, circuit breaker or chassis mounting hole.
X and Y are the symmetry planes for a 3-pole device.

	Insulated parts	Metal parts	Energized parts
A	0	0	100
B	0	0	60

Dimensions

MasterPact MTZ2 40 Fixed 3/4-pole devices

Connections

Horizontal rear connection

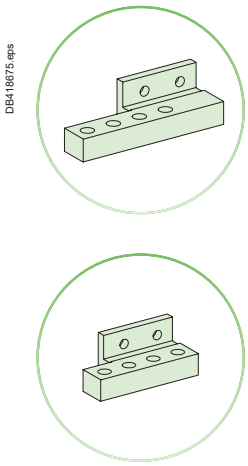

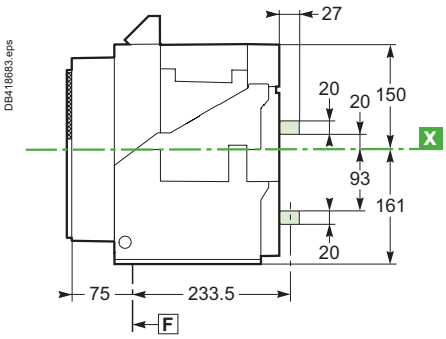

Details

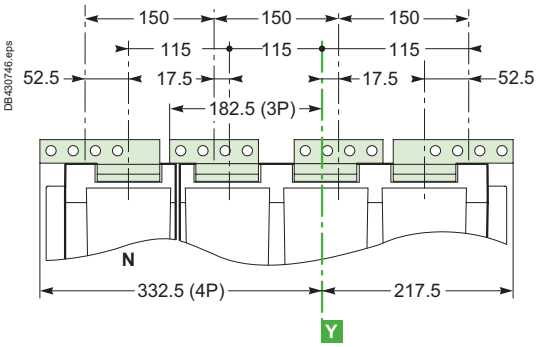

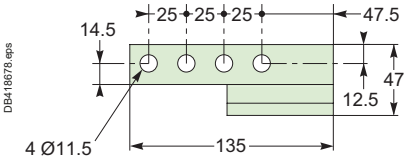

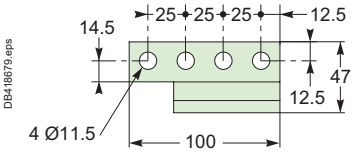

Vertical rear connection

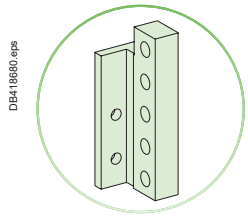

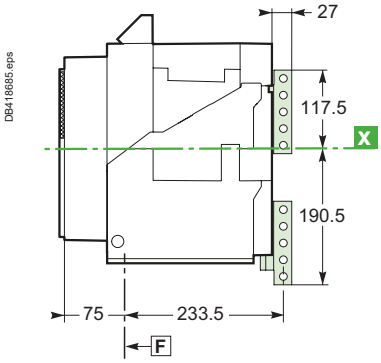

Details

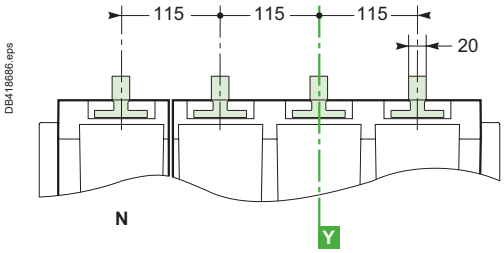

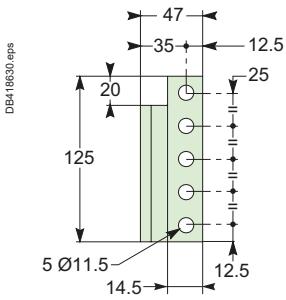

Note: Recommended connection screws: M10 stainless steel A4-80.
Tightening torque: 50 Nm with contact washer.
For 4000 A and above standard steel screws can generate additional temperature rise at connection point.

Dimensions

MasterPact MTZ2 40 Drawout 3/4-pole devices

Dimensions

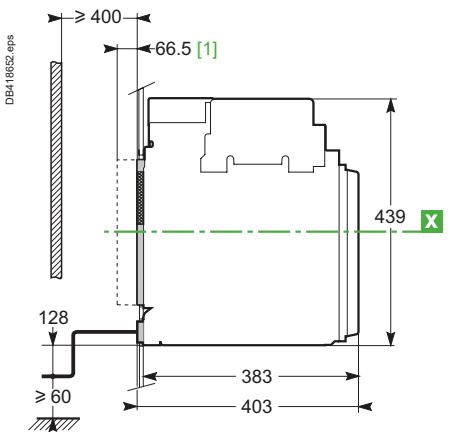

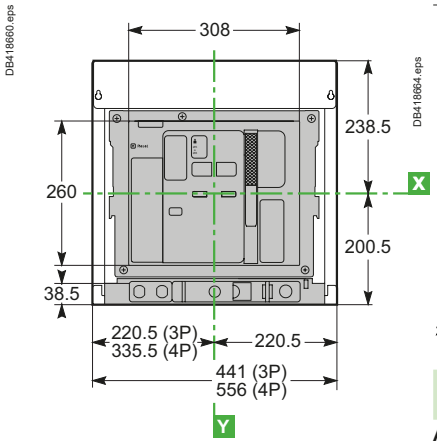

Safety clearances

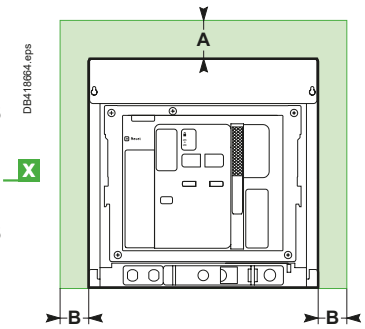

	Insulated parts	Metal parts	Energized parts
A	0	0	0
B	0	0	60

The safety clearances take into account the space required to remove the arc chutes.

Mounting on base plate or rails

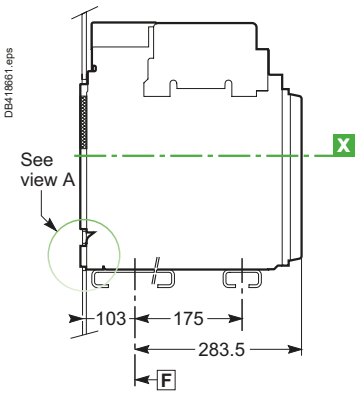

Mounting detail

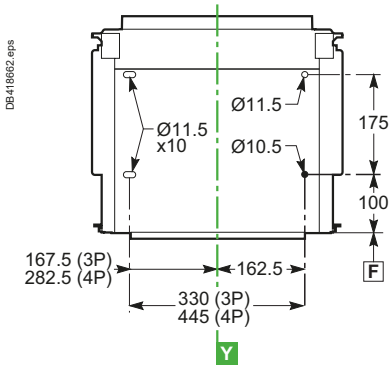

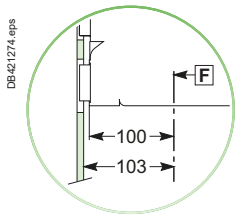

View A

Door cutout without escutcheon

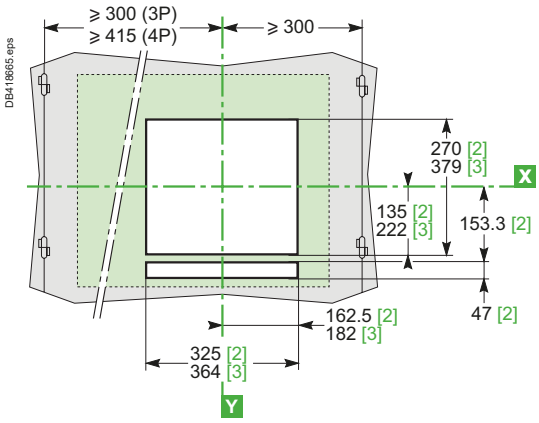

Door cutout with escutcheon

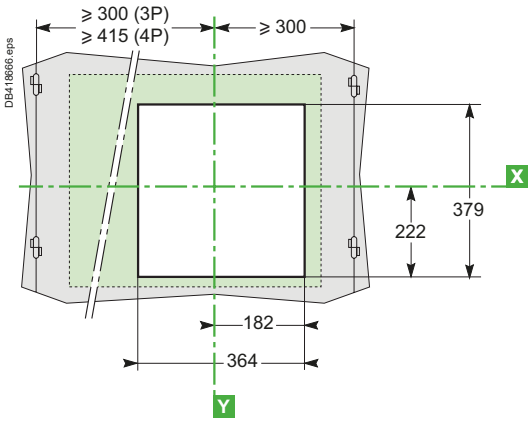

[1] Disconnected position.

Note: F Datum, circuit breaker or chassis mounting hole.
X and Y are the symmetry planes for a 3-pole device.

Dimensions

MasterPact MTZ2 40 Drawout 3/4-pole devices

Connections

Horizontal rear connection

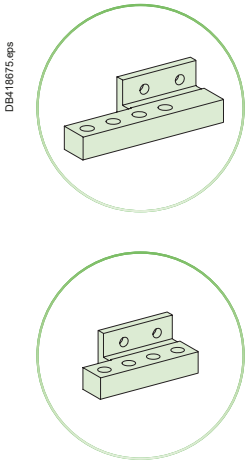

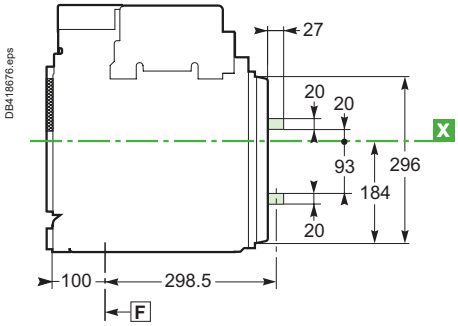

Details

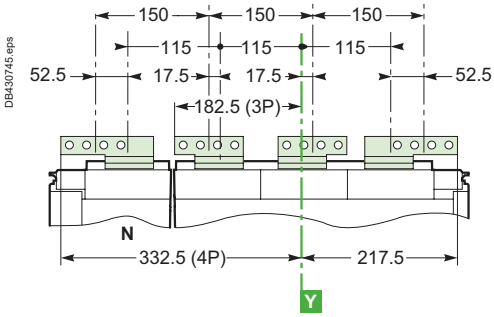

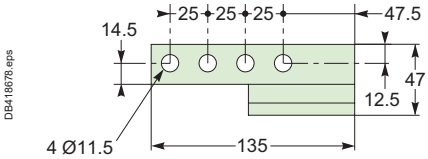

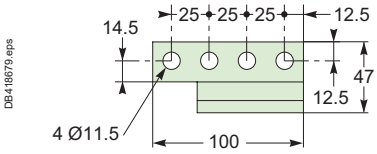

Vertical rear connection

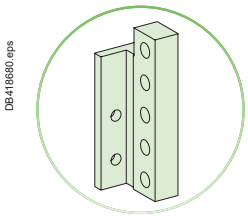

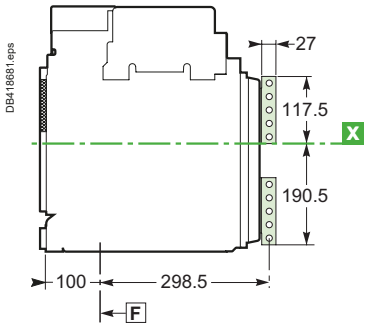

Details

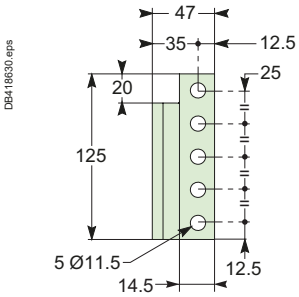

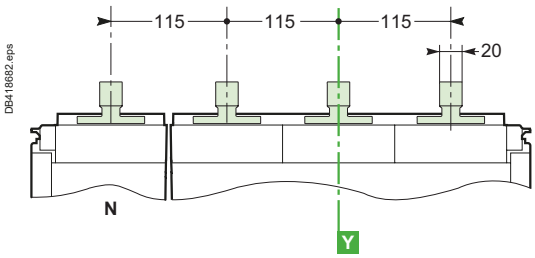

Note: Recommended connection screws: M10 stainless steel A4-80.
Tightening torque: 50 Nm with contact washer.
For 4000 A and above standard steel screws can generate additional temperature rise at connection point.

Dimensions

MasterPact MTZ3 Fixed 3/4-pole devices

Dimensions

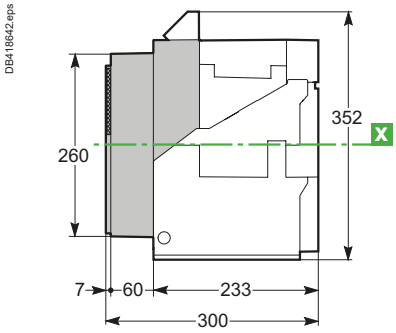

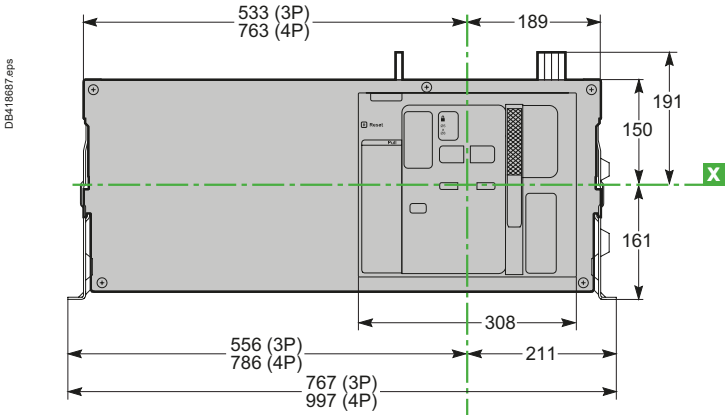

Mounting on base plate or rails

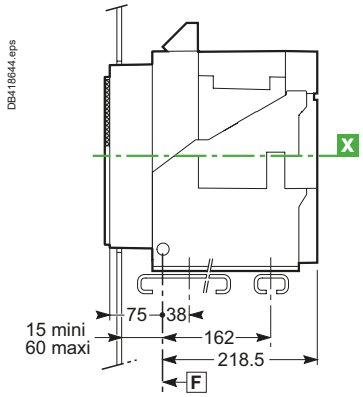

Mounting detail

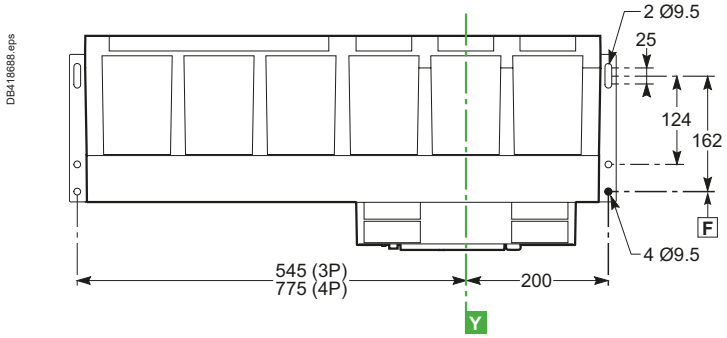

Door cutout

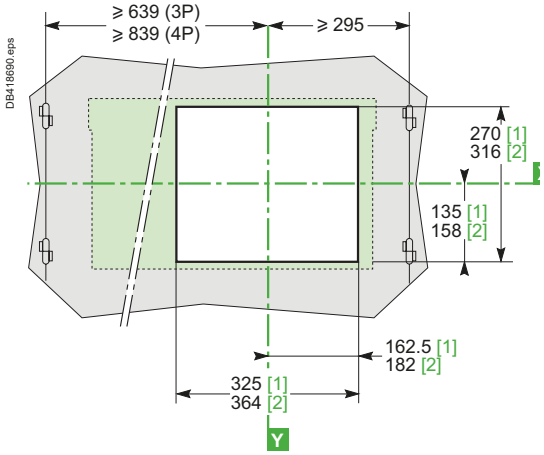

Safety clearances

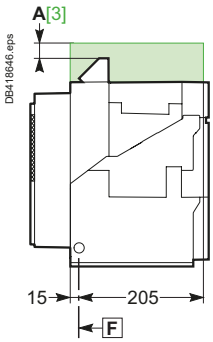

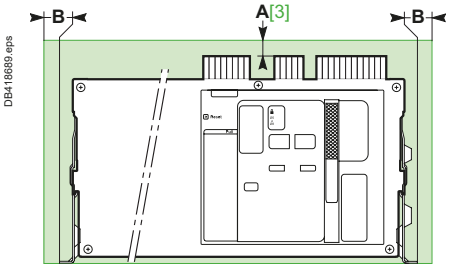

[1] Without escutcheon.
[2] With escutcheon.
[3] An overhead clearance of 110 mm is required to remove the arc chutes.
An overhead clearance of 20 mm is required to remove the terminal block.

Note: F Datum, circuit breaker or chassis mounting hole.
X and Y are the symmetry planes for a 3-pole device.

	Insulated parts	Metal parts	Energized parts
A	0	0	100
B	0	0	60

Dimensions

MasterPact MTZ3 Fixed 3/4-pole devices

Connections

Horizontal rear connection (MTZ3 40 to 50)

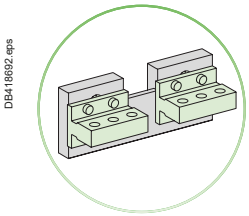

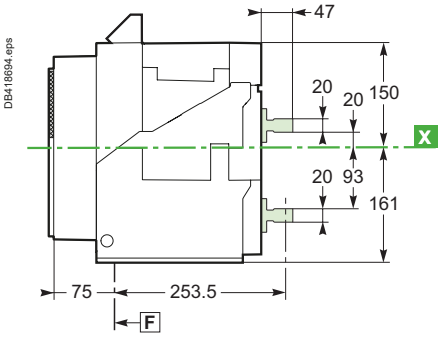

Details

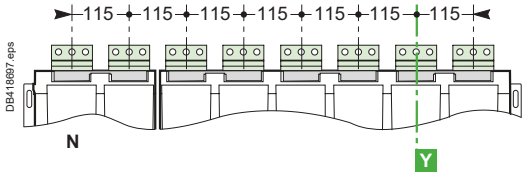

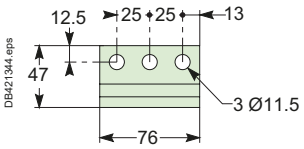

Vertical rear connection (MTZ3 40 to 50)

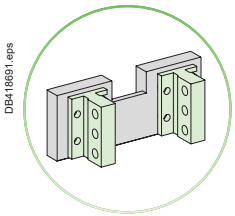

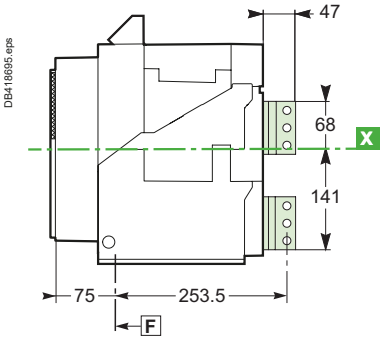

Details

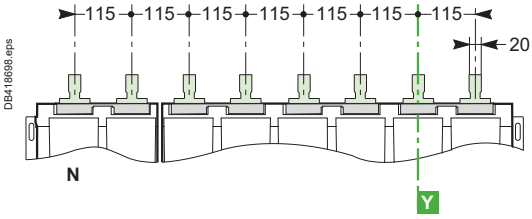

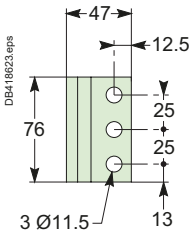

Vertical rear connection (MTZ3 63)

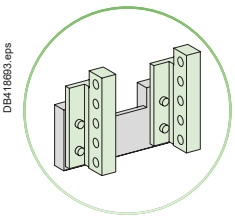

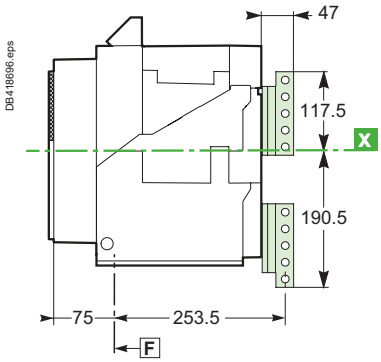

Details

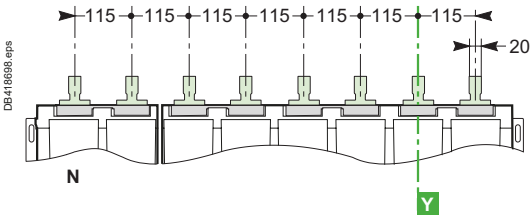

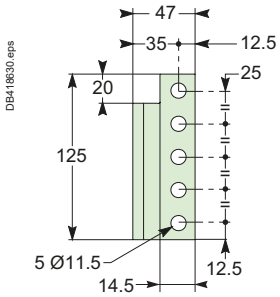

Note: Recommended connection screws: M10 stainless steel A4-80.
Tightening torque: 50 Nm with contact washer.
For 4000 A and above standard steel screws can generate additional temperature rise at connection point.

Dimensions

MasterPact MTZ3 Drawout 3/4-pole devices

Dimensions

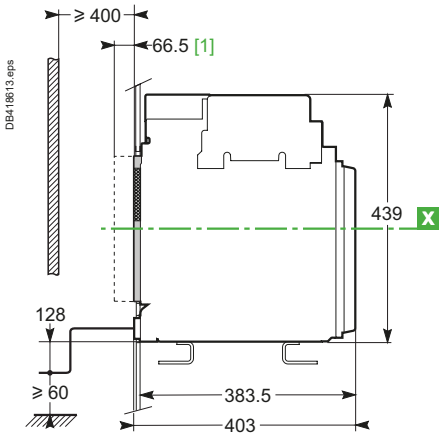

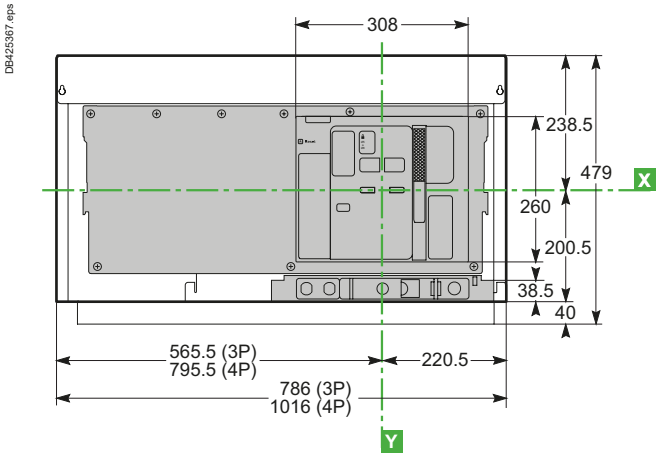

Mounting on base plate or rails

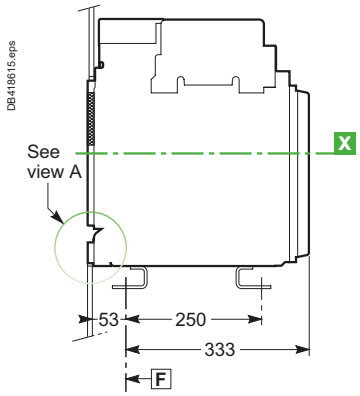

Mounting detail

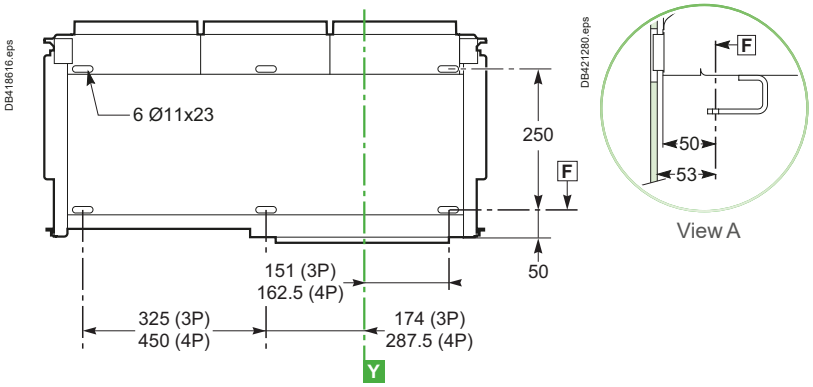

Safety clearances

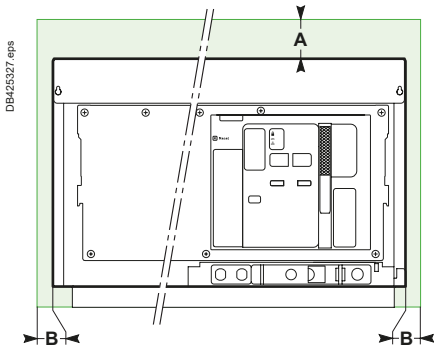

Door cutout without escutcheon

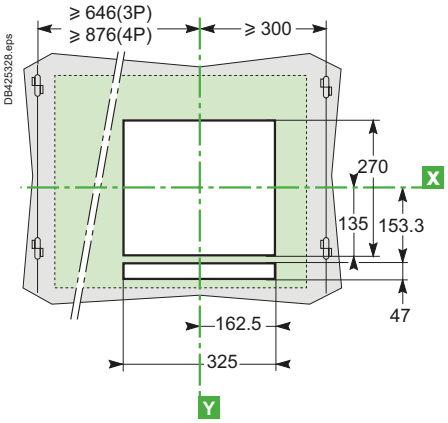

Door cutout with escutcheon

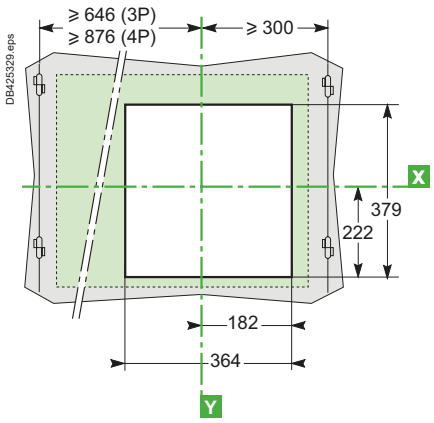

	Insulated parts	Metal parts	Energized parts
A	0	0	0
B	0	0	60

[1] Disconnected position.

The safety clearances take into account the space required to remove the arc chutes.

Note: F Datum, circuit breaker or chassis mounting hole.
X and Y are the symmetry planes for a 3-pole device.

Dimensions

MasterPact MTZ3 Drawout 3/4-pole devices

Connections

Horizontal rear connection (MTZ3 40 to 50)

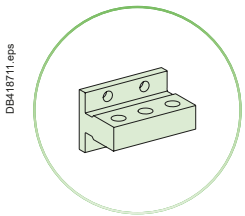

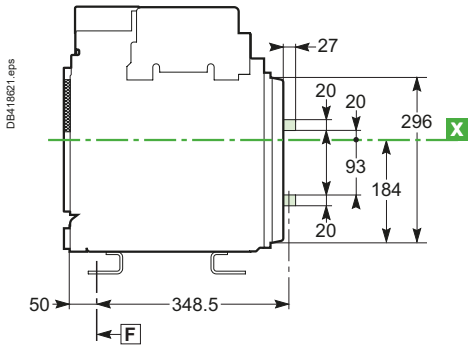

Details

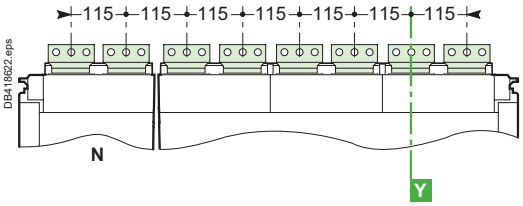

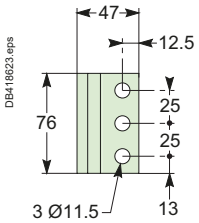

Vertical rear connection (MTZ3 40 to 50)

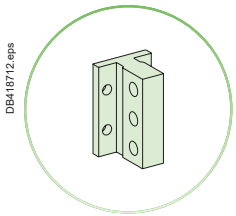

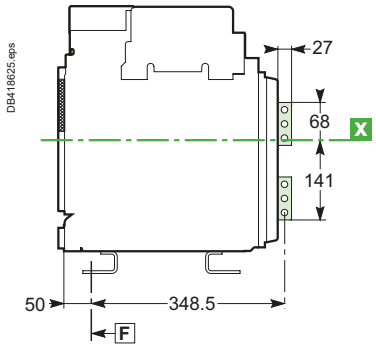

Details

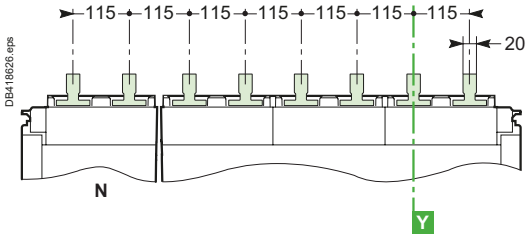

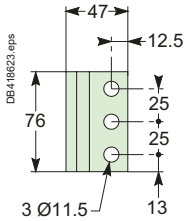

Vertical rear connection (MTZ3 63)

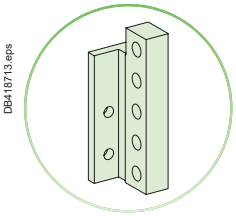

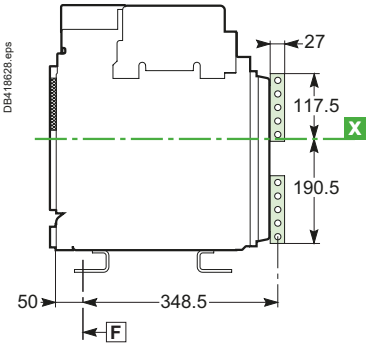

Details

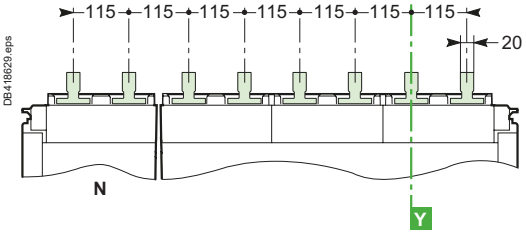

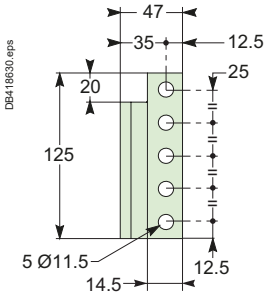

Note: Recommended connection screws: M10 stainless steel A4-80.
Tightening torque: 50 Nm with contact washer.
For 4000 A and above standard steel screws can generate additional temperature rise at connection point.

Dimensions
Accessories

Mounting on backplane with special brackets (MasterPact MTZ2 08 to 32 fixed)

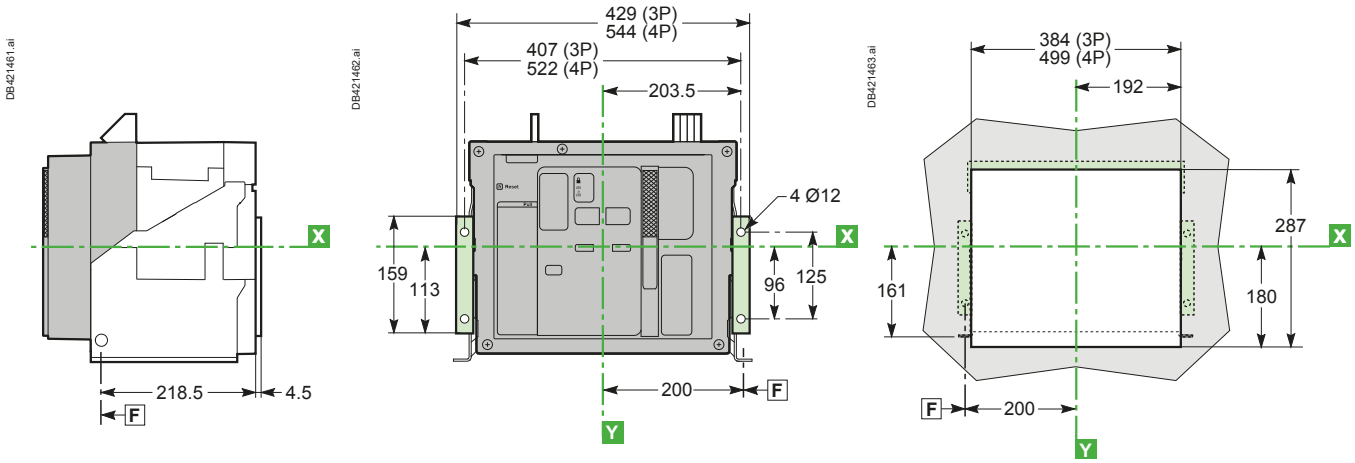

Front-connection adapter (MasterPact MTZ2 08 to 32 fixed)

Horizontal rear connection

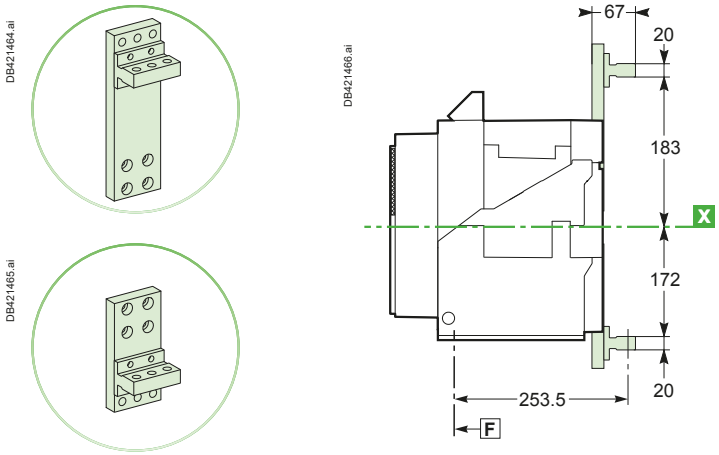

Detail

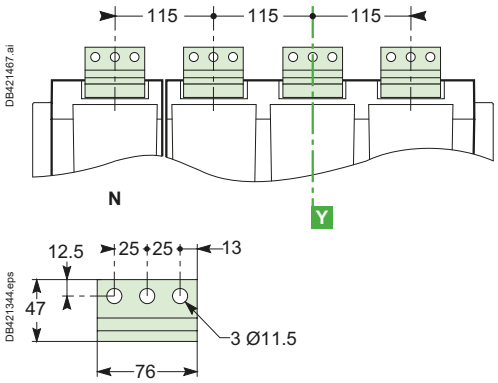

Disconnectable front-connection adapter (MasterPact MTZ2 08 to 32 fixed)

Vertical rear connection

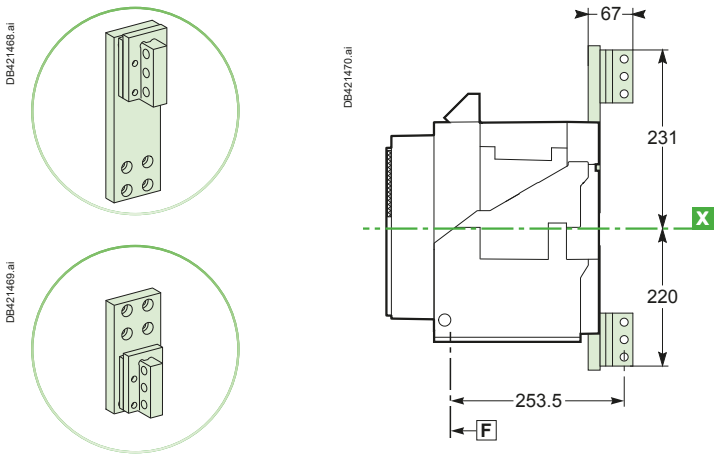

Detail

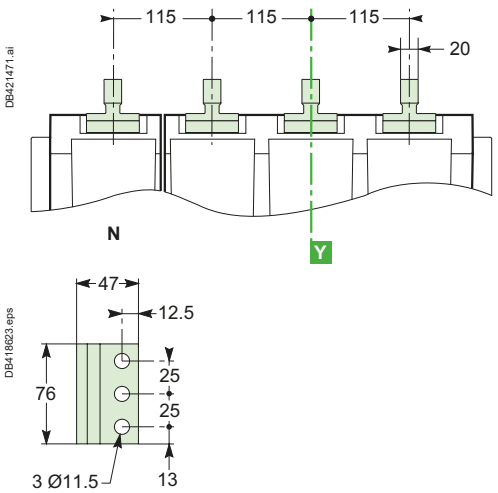

Note: Recommended connection screws: M10 Class 8.8.
Tightening torque: 50 Nm with contact washer.

F Datum, circuit breaker or chassis mounting hole.
X and Y are the symmetry planes for a 3-pole device.

Rear panel cutout (drawout devices)

MTZ1

Rear view

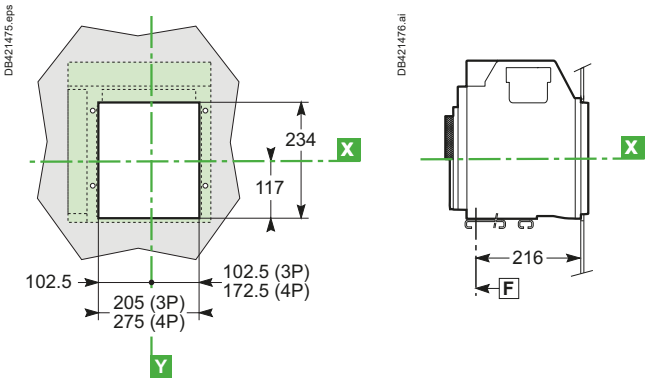

MTZ2 08 to MTZ2 40

Rear view

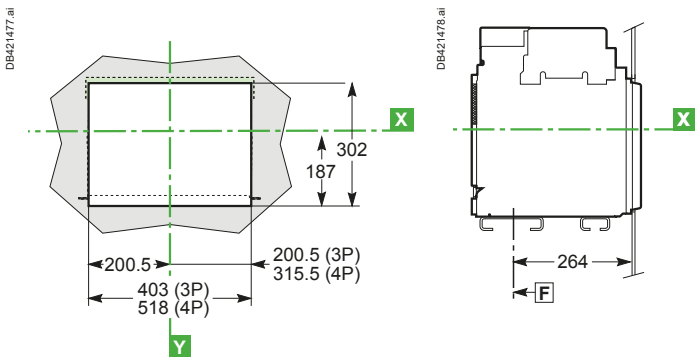

MTZ3 40 to MTZ3 63

Rear view

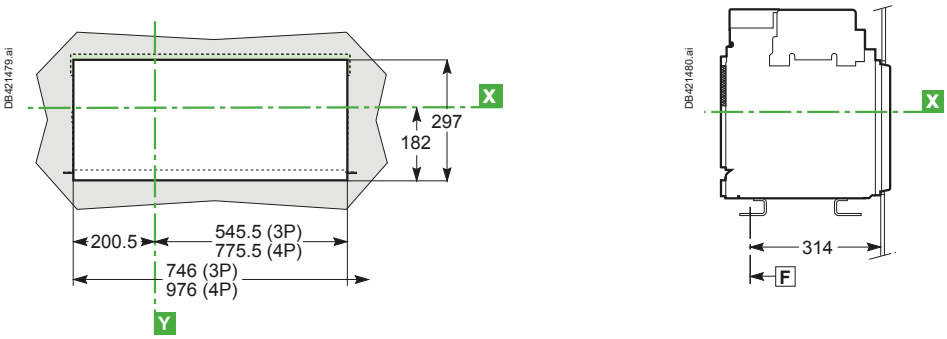

Escutcheon

MasterPact MTZ1

Fixed device

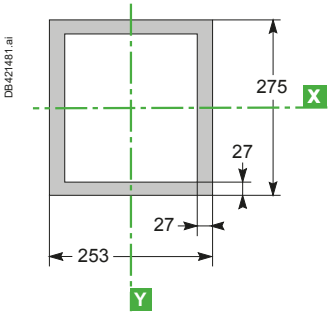

Drawout device

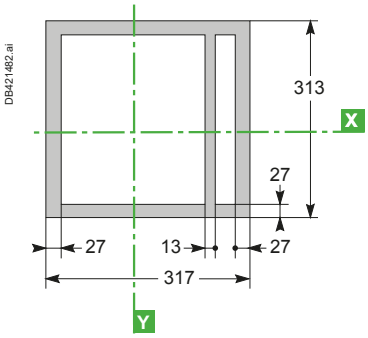

MasterPact MTZ2/MTZ3

Fixed device

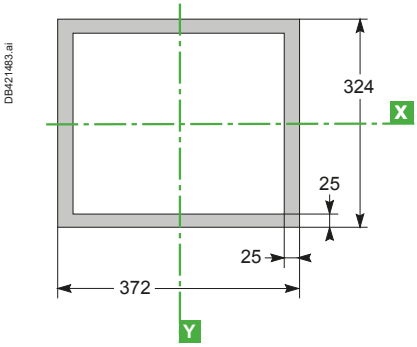

Drawout device

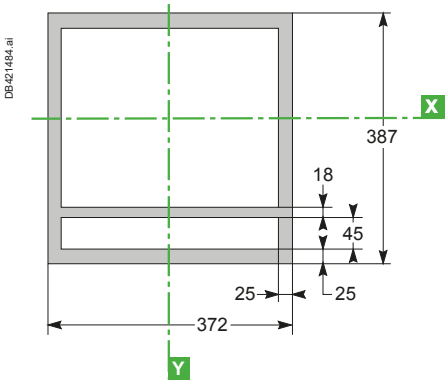

F Datum, circuit breaker or chassis mounting hole.
X and Y are the symmetry planes for a 3-pole device.

Dimensions
External modules

Connection of auxiliary wiring to terminal block

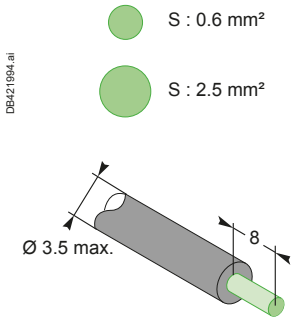

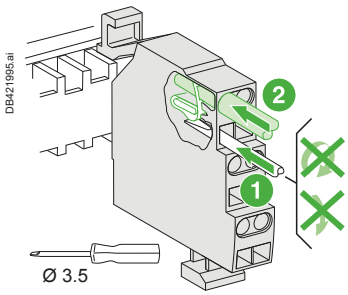

One conductor only per connection point.

External power supply module (AD)

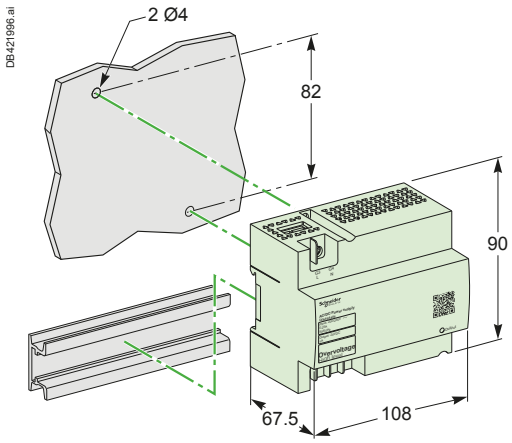

Battery module (BAT)

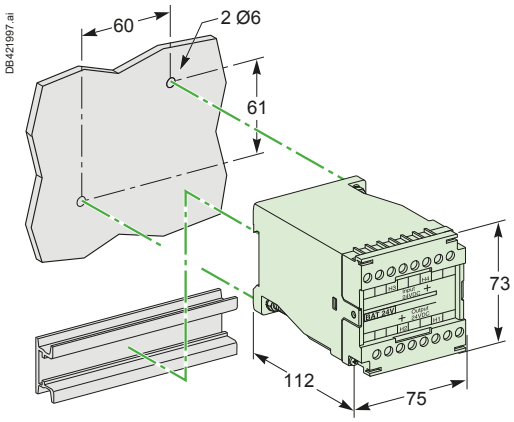

RIM

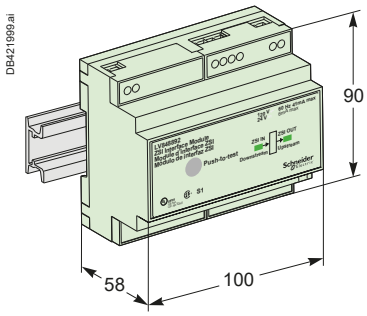

Delay unit for MN voltage release

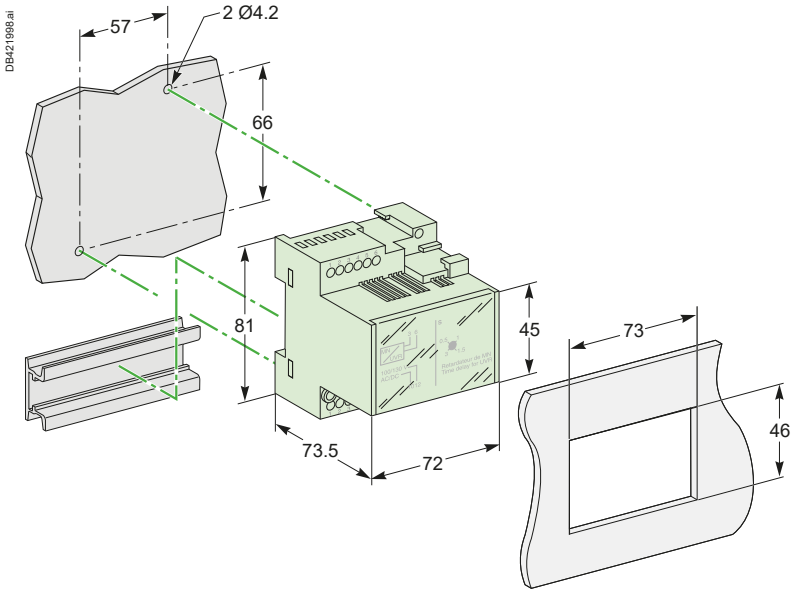

F

Dimensions
External modules

IFE - Ethernet interface

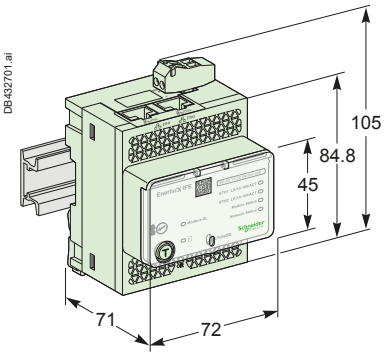

IFM - Modbus Interface

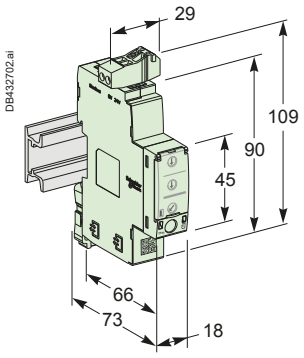

I/O (Input/Output) application module

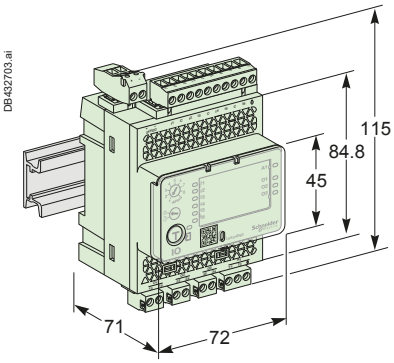

Com'X 210 - Com'X 510

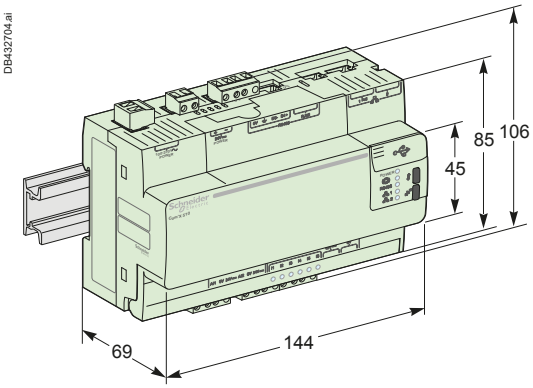

Dimensions
External modules

External sensor for source ground return (SGR) protection

Sensor

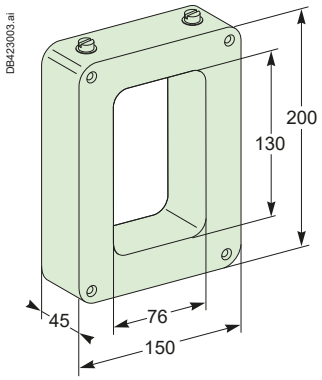

"MGDF summer" module

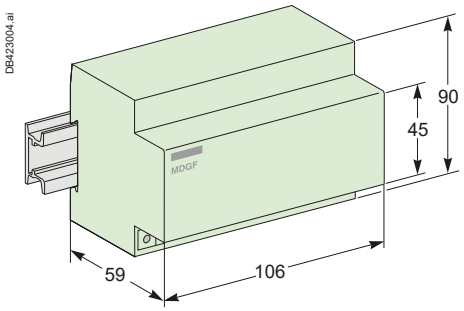

FDM128

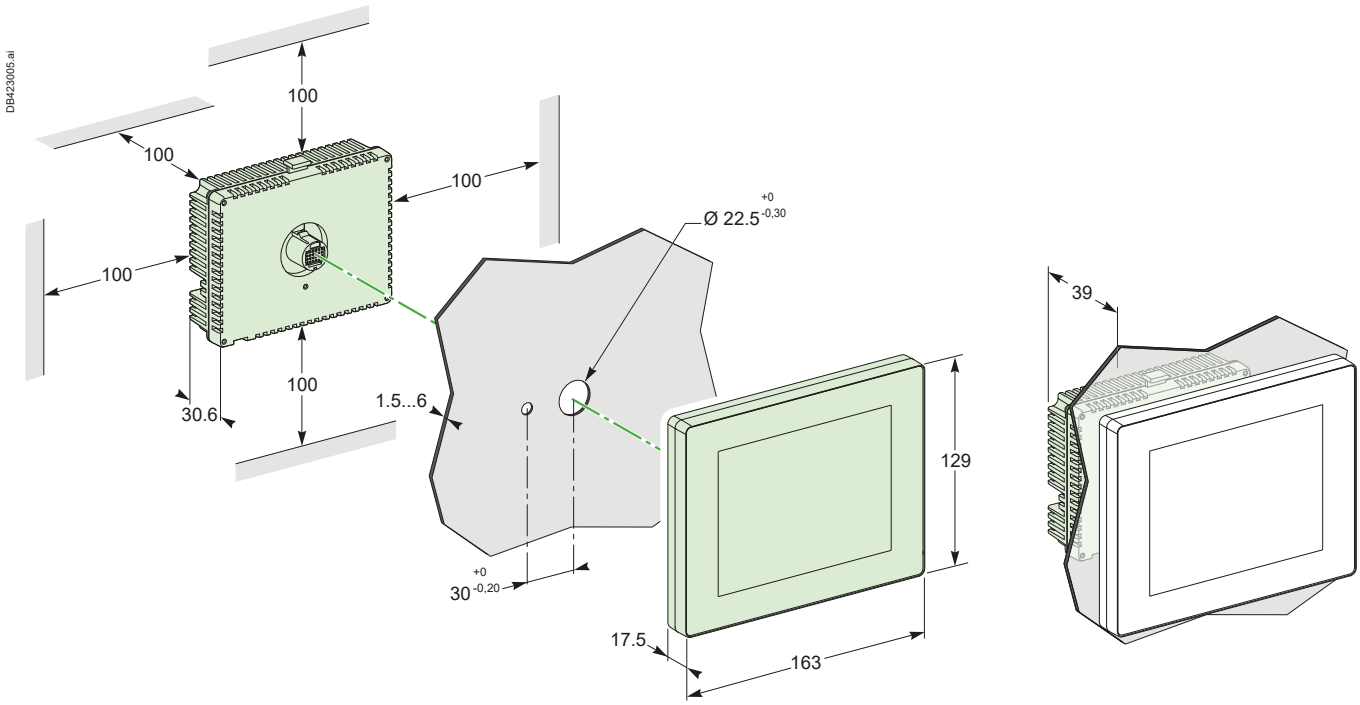

F

Life Is On Schneider Electric

External sensor for external neutral

400/1600 A (MTZ1 06 to MTZ1 16)

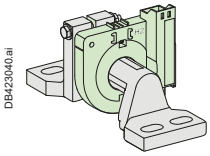

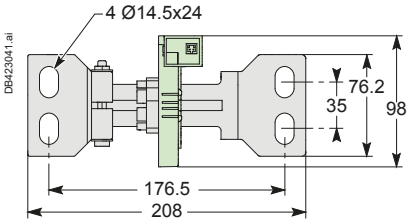

400/2000 A (MTZ2 08 to MTZ2 20)

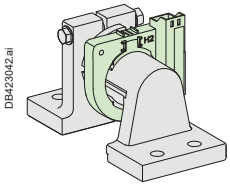

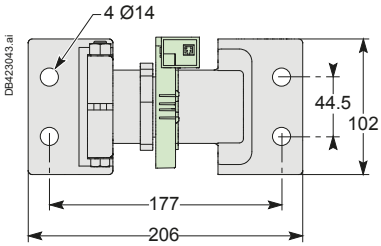

1000/4000 A (MTZ2 25 to MTZ2 40)

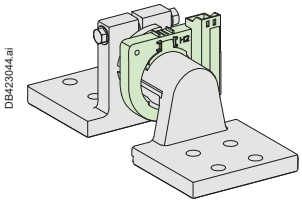

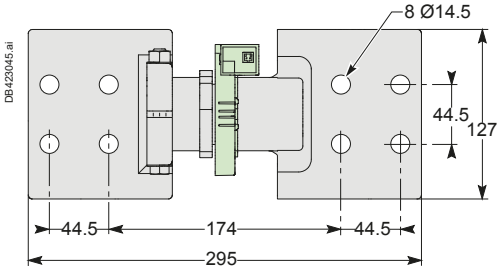

4000/6300 A (MTZ3 40 to MTZ3 63)

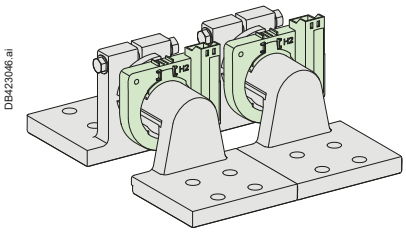

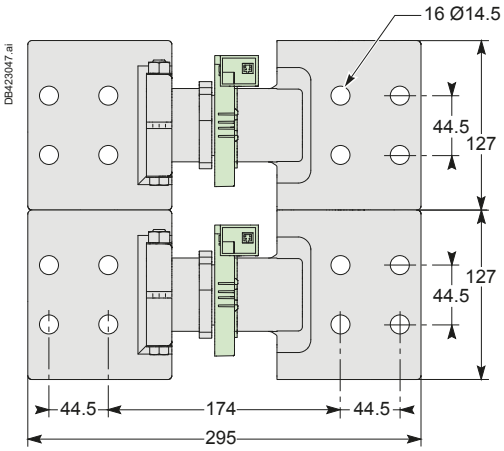

2000/6300 A (MTZ2 to MTZ3) single sensor kit

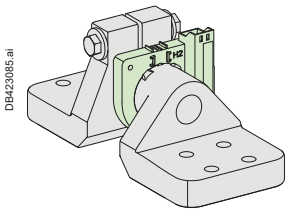

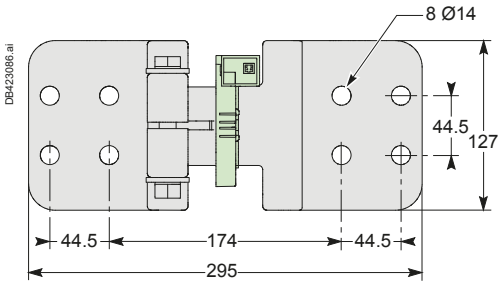

2000/6300 A (MTZ2 to MTZ3) 3 layer bus

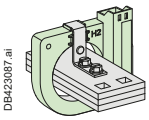

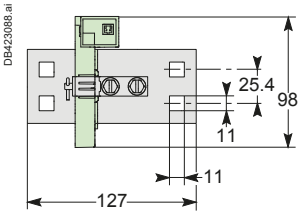

F

Dimensions
External modules

Rectangular sensor for earth leakage protection (Vigi)

280 x 115 mm window

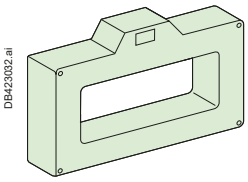

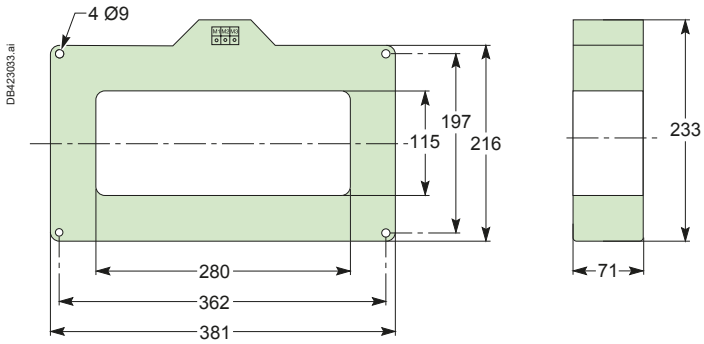

470 x 160 mm window

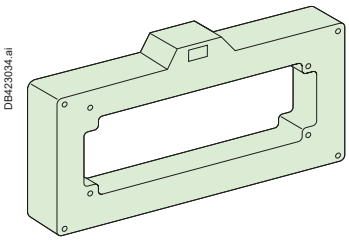

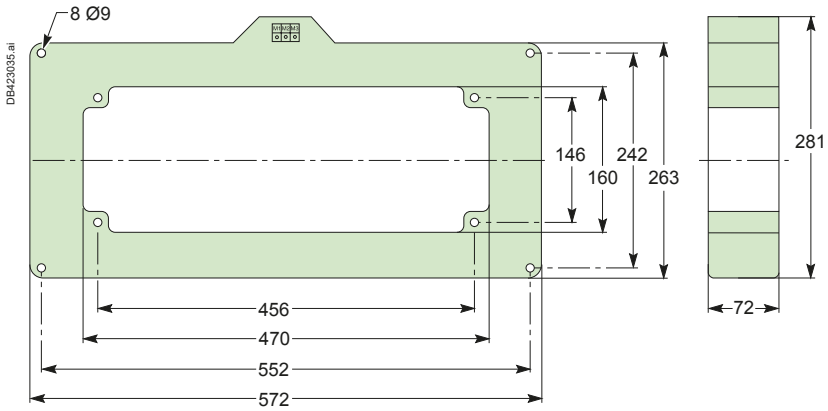

Busbars	I ≤ 1600 A	I y 3200
Window (mm)	280 x 115	470 x 160
Weight (kg)	14	18

Busbars path

280 x 115 mm window
Busbars spaced 70 mm center-to-center

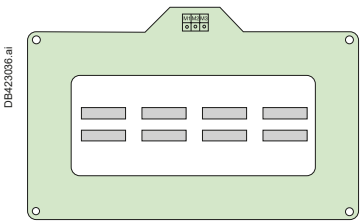

2 bars 50 x 10.

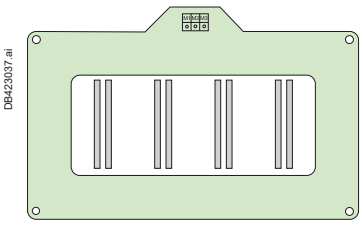

2 bars 100 x 5.

470 x 160 mm window
Busbars spaced 115 mm center-to-center

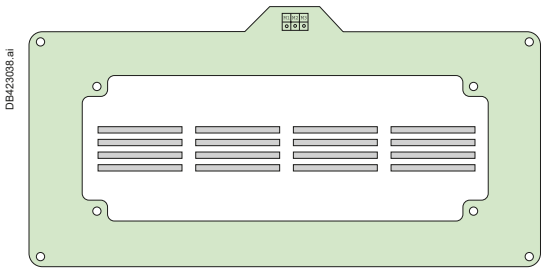

4 bars 100 x 5.

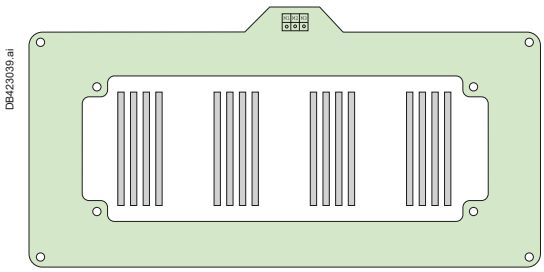

4 bars 125 x 5.

Clusters

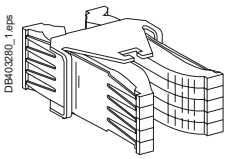

Table : number of clusters required for the different chassis models

Chassis rating (A)	MasterPact MTZ1 3P	4P
630	12	18
800	12	18
1000	12	18
1250	12	18
1600	18	24

Note: the minimum order is 6 parts.

Table : number of clusters required for the different chassis models

Chassis rating (A)	MasterPact MTZ2-3 3P						MasterPact MTZ2-3 4P					
	N1, NA	H1, HA	H10, HA10	H2, HF	H3	L1	N1, NA	H1, HA	H10, HA10	H2, HF	H3	L1
MTZ2 08 to 16	12	12	12	24		24	16	16	16	32		32
MTZ2 20	24	24	24	24	24	42	32	32	32	32	32	56
MTZ2 25		24	24	24	24			32	32	32	32	
MTZ2 32		36	36	36	36			48	48	48	48	
MTZ2 40		42	42	42	42			56	56	56	56	
MTZ3 40 to 50		72		72				96		96		
MTZ3 63		72		72				96		96		

Note: the minimum order is 6 parts.

Electrical diagrams

MasterPact MTZ1 Fixed and drawout devices

The diagram is shown with circuits de-energised, all devices open, connected and charged and relays in normal position.

Power / Control unit / Indication contacts

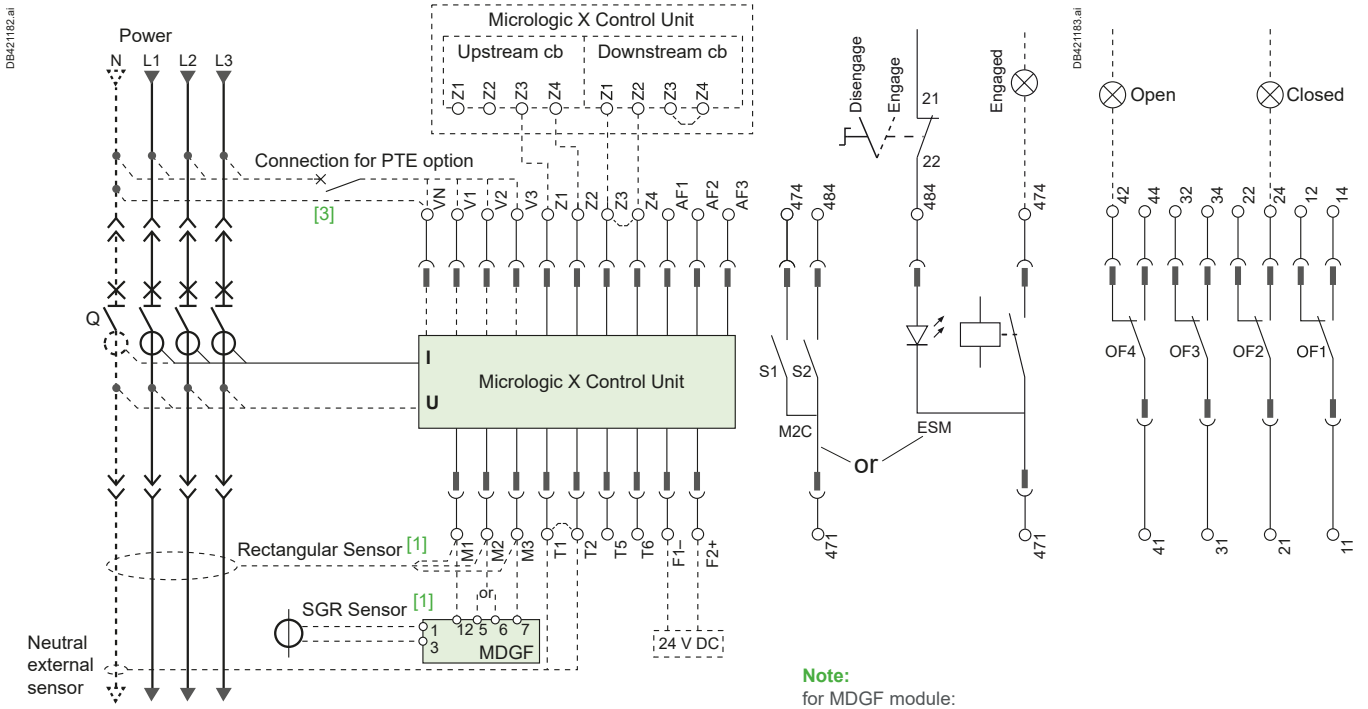

Note:
for MDGF module:
- Use terminal 5 for MTZ1 and MTZ2.
- Use terminal 6 for MTZ3.

Remote operation

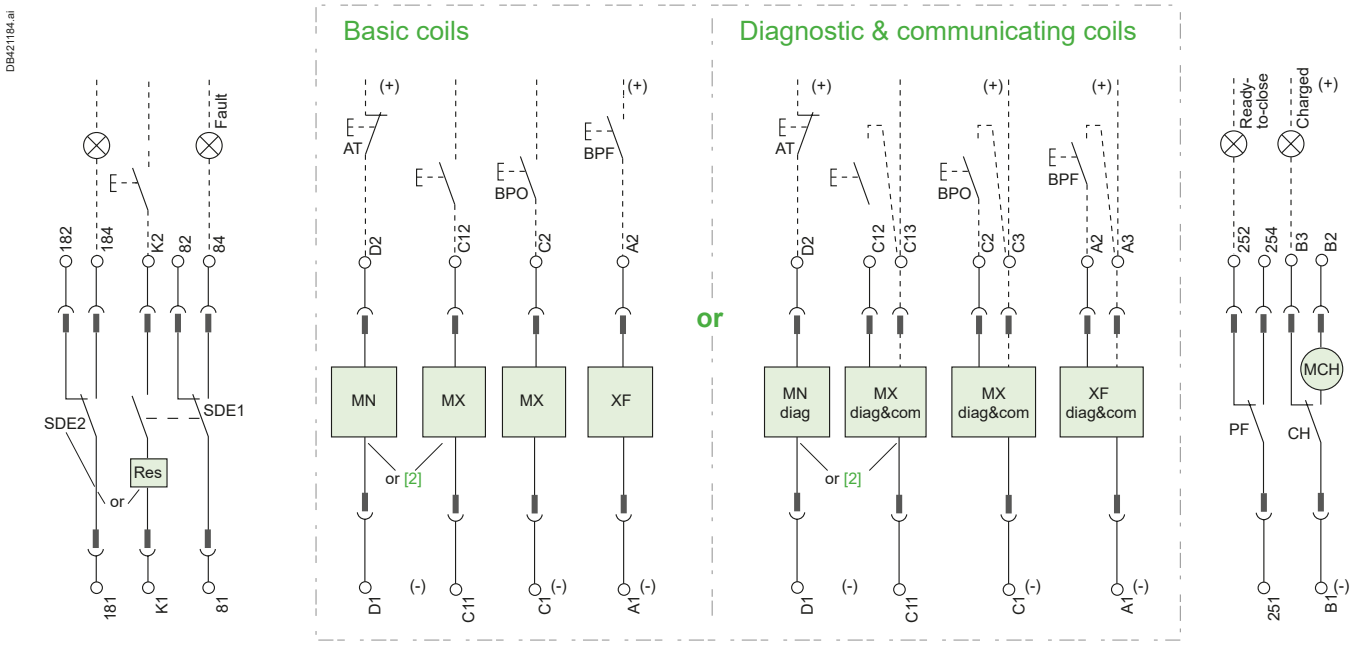

Note: Maximum length of the two wires cables between A2-A3 / C2-C3 / C12-C13: 5 m.
The maximum lengths of the wiring between the AC/DC power supply and voltage release terminals A1-A3 / C1-C3 / C11-C13 /D1-D2 are given page D-18.

[1] Rectangular sensor or SGR sensor.

[2] Possibility to add a second MX/MX diag&com or a MN/MN diag voltage release.The second MX diag&com voltage release can only be installed after the delivery of the circuit breaker. this is an after sales adaptation.

[3] For 3 poles MasterPact MTZ circuit breaker in power system with neutral distributed, the neutral shall be connected to the VN terminal of MicroLogic X and ENVT configured to "Yes" to ensure the quality of power measurement.

Electrical diagrams

MasterPact MTZ1 Fixed and drawout devices

Terminal block marking

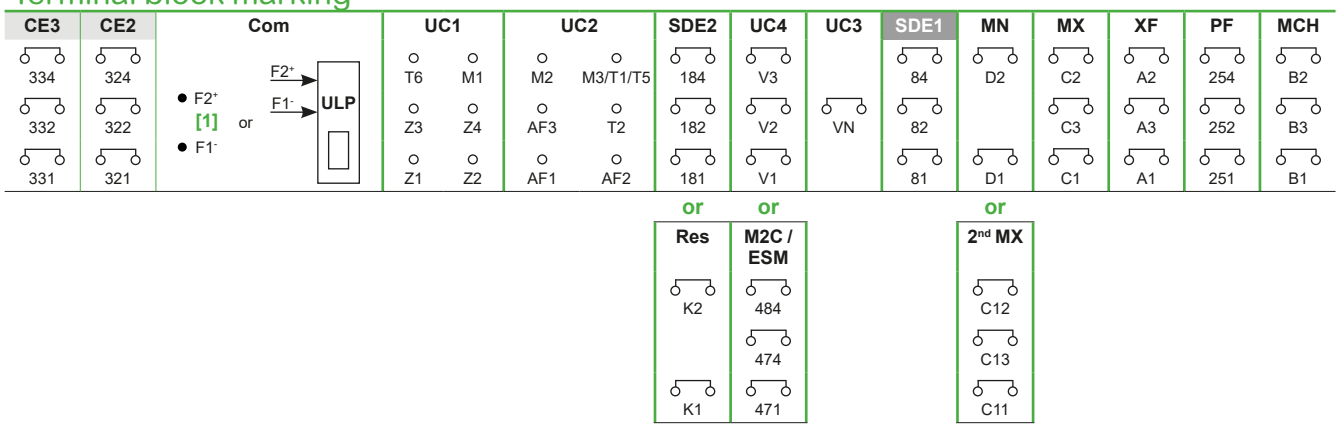

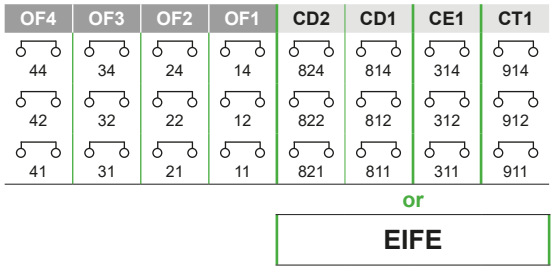

Control unit terminal block

Com : Fixed, F2+ F1- (as standard) or ULP port (as option)
Drawout, F2+ F1- (as standard) or ULP port (as option)

UC1 : Z1-Z4 zone selective interlocking
M1 = rectangular sensor (MicroLogic 7.0 X) or MDGF module input

UC2 : T1, T2 = neutral external sensors
M2, M3 = rectangular sensor (MicroLogic 7.0 X) or MDGF module input

UC3 : Voltage connector (must be connected to the neutral with a 3P circuit breaker)

UC4 : External Voltage Connector (PTE option)

or

M2C : 2 programmable contacts (external relay)

or

ESM : ERMS switch module

Indication contacts terminal block

OF4 / OF3 / OF2 / OF1 : ON/OFF indication contacts OF

Chassis contacts terminal block

CD2 / CD1: disconnected position contacts
CE3 /CE2 / CE1: connected position contacts
CT1: test position contacts

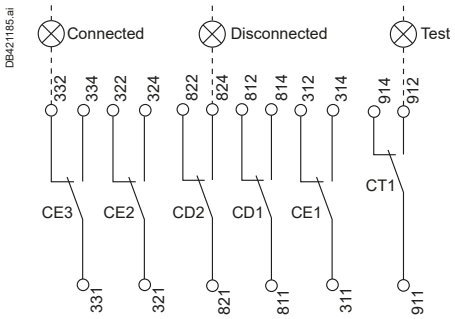

Remote operation terminal block

SDE2:	fault-trip indication contact
or	
Res:	remote reset
SDE1:	fault-trip indication contact (supplied as standard)
MN /MN diag:	undervoltage release standard or diagnostic
or	
2nd MX/MX diag&com:	opening voltage release standard or diagnostic & communicating
MX/MX diag&com:	opening voltage release standard or diagnostic
XF/XF diag&com:	closing voltage release standard or diagnostic & communicating
PF:	ready-to-close contact
MCH:	electric motor

Note: when communicating MX diag&com or XF diag&com voltage releases are used, the third wire (C3,A3, C13) must be connected.

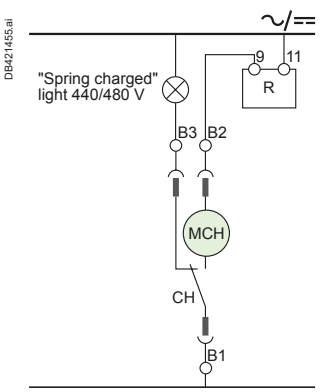

Spring charging motor 440/480 V AC
(380 V motor + additional resistor)

Drawout device only.

SDE1, OF1, OF2, OF3, OF4 supplied as standard.

interconnected connections (only one wire per connection point).

[1] The connection of the +/- of the power supply either on terminals F1/F2 of MicroLogic X or on the +/- terminals of the ULP port must be strictly respected. Crossing the polarities may damage the device.

Electrical diagrams

MasterPact MTZ2/MTZ3 Fixed and drawout devices

The diagram is shown with circuits de-energised, all devices open, connected and charged and relays in normal position.

Power / Control unit

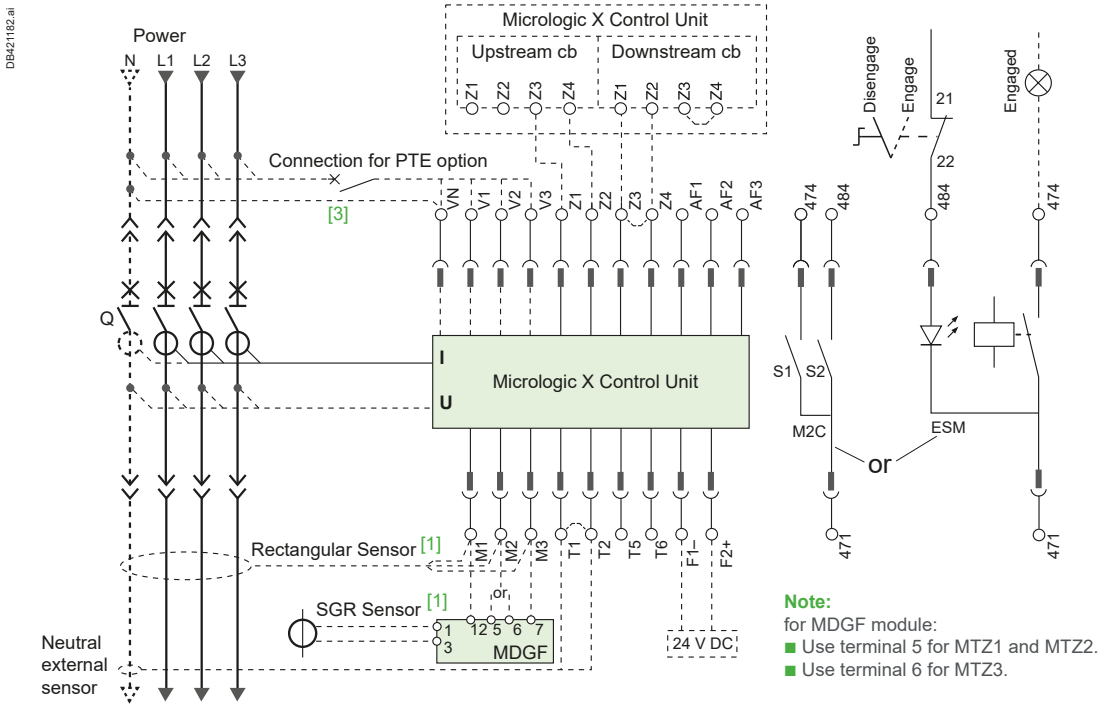

Note:
for MDGF module:
- Use terminal 5 for MTZ1 and MTZ2.
- Use terminal 6 for MTZ3.

Remote operation

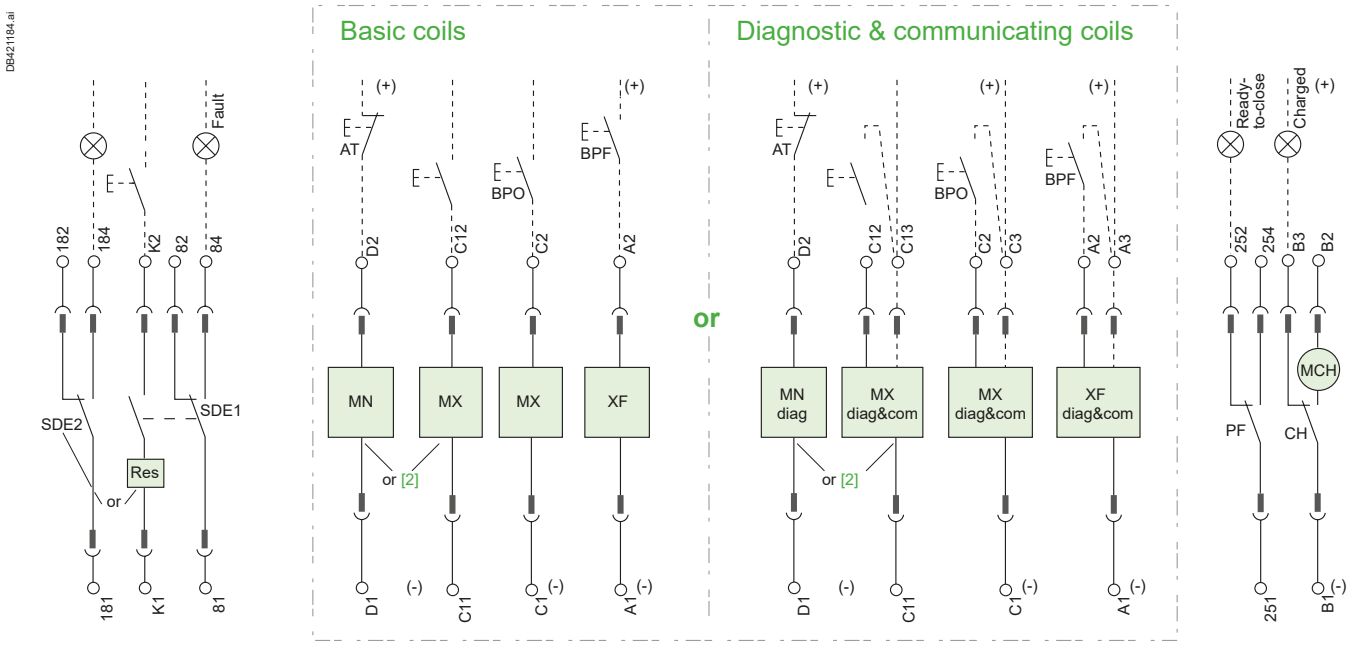

Note: Maximum length of the two wires cables between A2-A3 / C2-C3 / C12-C13: 5 m.
The maximum lengths of the wiring between the AC/DC power supply and voltage terminals A1-A3 / C1-C3 / C11-C13 /D1-D2 are given page D-18.

[1] Rectangular sensor or SGR sensor.

[2] Possibility to add a second MX/MX diag&com or a MN/MN diag voltage release.The second MX diag&com voltage release can only be installed after the delivery of the circuit breaker. this is an after sale adaptation.

[3] For 3 poles MasterPact MTZ circuit breaker in power system with neutral distributed, the neutral shall be connected to the VN terminal of MicroLogic X and ENVT configured to "Yes" to ensure the quality of power measurement.

Electrical diagrams

MasterPact MTZ2/MTZ3 Fixed and drawout devices

Indication contacts

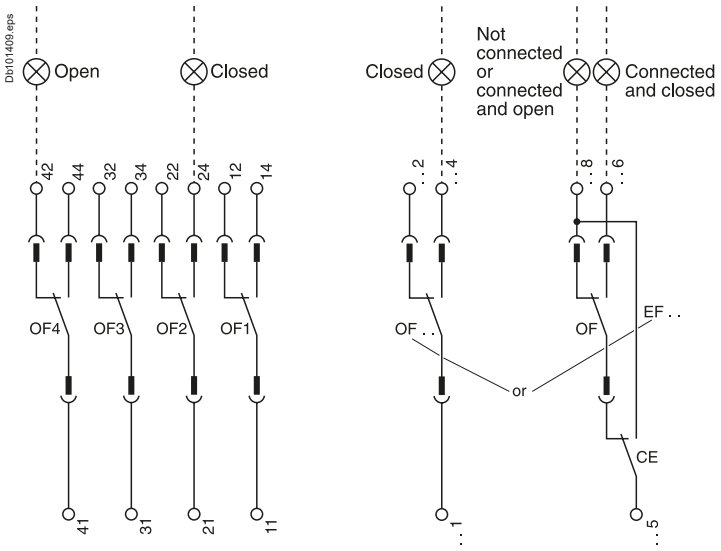

Chassis contacts

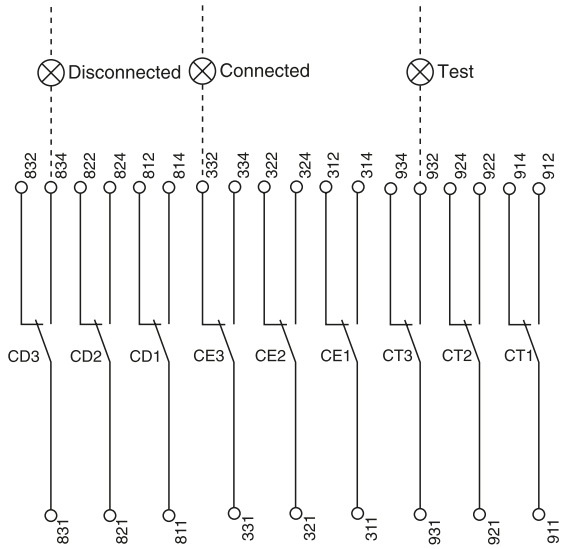

Control unit terminal block

Com : Fixed, F2+ F1- (as standard) or ULP port (as option)
Drawout, F2+ F1- (as standard) or ULP port (as option)

UC1 : Z1-Z4 zone selective interlocking

M1 = rectangular sensor (MicroLogic 7.0 X) or MDGF module input

UC2 : T1, T2 = neutral external sensors
M2, M3 = rectangular sensor (MicroLogic 7.0 X) or MDGF module input

UC3 : Voltage connector (must be connected to the neutral with a 3P circuit breaker)

UC4 : External Voltage Connector (PTE option)

M2C : 2 programmable contacts (external relay)
or
ESM : ERMS switch module

Remote operation terminal block

SDE2:	fault-trip indication contact
or	
Res:	remote reset
SDE1:	fault-trip indication contact (supplied as standard)
MN /MN diag:	undervoltage release standard or diagnostic
or	
2ndMX/MX diag&com:	opening voltage release standard or diagnostic & communicating
MX/MX diag&com:	opening voltage release standard or diagnostic
XF/XF diag&com:	closing voltage release standard or diagnostic & communicating
PF:	ready-to-close contact
MCH:	electric motor

Note: when communicating MX com or XF com voltage releases are used, the third wire (C3,A3, C13) must be connected.

Indication contacts

OF4 : **OF3** **OF2** **OF1**	ON/OFF indication contacts OF	**OF24 or EF24** **OF23 or EF23** **OF22 or EF22** **OF21 or EF21** **OF14 or EF14** **OF13 or EF13** **OF12 or EF12** **OF11 or EF11**	ON/OFF indication contacts OF or connected/closed contacts EF

Chassis contacts

CD3 **CD2** **CD1**	disconnected position contacts	**CE3** **CE2** **CE1**	connected position contacts	**CT3** **CT2** **CT1**	test position contacts
or		**or**		**or**	
CE6 **CE5** **CE4**	connected position contacts	**CT6** **CT5** **CT4**	test position contacts	**CE9** **CE8** **CE7**	connected position contacts
				or	
				CD6 **CD5** **CD4**	disconnected position contacts

F

Electrical diagrams

MasterPact MTZ2/MTZ3 Fixed and drawout devices

Terminal block marking

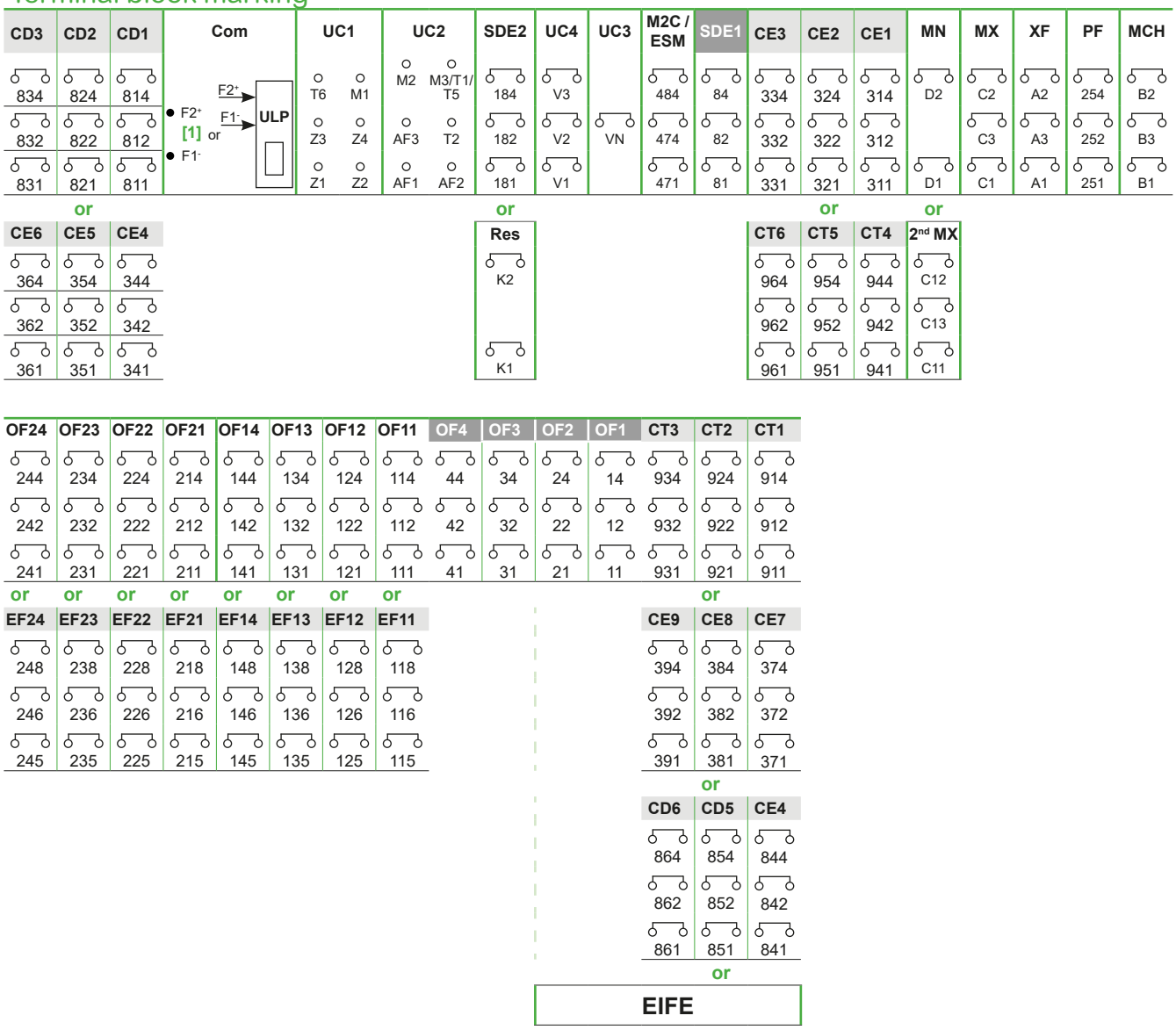

Drawout device only.

SDE1, OF1, OF2, OF3, OF4 supplied as standard.

interconnected connections
(only one wire per connection point).

[1] The connection of the +/- of the power supply either on terminals F1/F2 of MicroLogic X or on the +/- terminals of the ULP port must be strictly respected. Crossing the polarities may damage the device.

F

Electrical diagrams

24 V DC external power supply AD module

■ With MicroLogic, it is recommended to connect 24 V DC external power supply (AD module) to the MicroLogic control unit (F1- F2+) in order to help
□ keep available the display and the energy metering, even if Current < 20 % In.
□ use the display even if the circuit breaker is open or not supplied (for the exact conditions of use, see the “electrical diagrams” part of this catalog)
□ display fault currents after tripping
□ modify settings when the circuit breaker is open (OFF position)
■ The same 24 V DC external power supply can be used for the micrologic control unit and the communication devices (IFE, IFM, I/O, FDM).
■ The same 24 V DC external power supply can be used for the MicroLogic control unit and M2C/ESM
■ The 24 V DC external power supply (AD module) for the MicroLogic control unit (F1- F2+) is not required for basic protections LSIG.
■ The 24 V DC external power supply for the BCM ULP communication module (E1-E2) is required. The same 24 V DC external power supply can be used for the communication devices (IFE, IFM, I/O, FDM).
■ If the 24 V DC external power supply (AD module) is used to supply MicroLogic control unit, this power supply shall be used only for supplying MicroLogic control unit and M2C.
■ The dedicated AD power supply shall be used only for the MicroLogic trip unit. If the COM option is used, a second dedicated 24 V DC external power supply shall be used.

Note: in case of using the 24 V DC external power supply (AD module), maximum cable length between 24 V DC (G1, G2) and the control unit (F1-, F2+) must not exceed 10 meters.
The internal voltage taps are connected to the bottom side of circuit breaker. An external voltage taps are possible using the PTE option:
■ With the option, the internal voltage taps are disconnected and the voltage taps are connected to terminals VN, V1, V2, V3.
■ The PTE option is required for voltages less than 220 V and greater than 690 V (in which case a voltage transformer is compulsory). For three-pole devices, the system is supplied with the terminal VN connected only to the control unit.
■ When the PTE option is implemented, the voltage measurement input must be protected against short-circuits. Installed as close as possible to the busbars, this protection function is ensured by a P25M circuit breaker (1 A rating) with an auxiliary contact (cat. no 21104 and 21117).
■ This voltage measurement input is exclusively dedicated to the control unit and must never be used to supply other circuits outside the switchboard.

Connection

The maximum length for each conductor supplying power to the trip unit module is 10 m.

Do not ground F2+, F1-, or power supply output:
■ the positive terminal (F2+) on the trip unit must not be connected to earth ground
■ the negative terminal (F1-) on the trip unit must not be connected to earth ground
■ the output terminals (- and +) of the 24 V DC power supply must not be grounded.

Reduce electromagnetic interference:
■ the input and output wires of the 24 V DC power supply must be physically separated as much as possible
■ the 24 V DC wires (output of the 24 V DC power supply) shall be twisted together
■ the 24 V DC wires (output of the 24 V DC power supply) must cross all power cables perpendicularly
■ power supply conductors must be cut to length. Do not loop excess conductor.

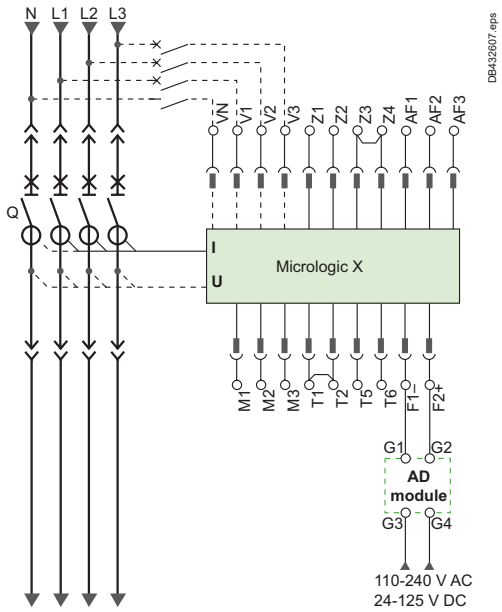

F

F

Integrate in special applications
Source-changeover systems

Presentation G-2
Mechanical interlocking G-3
Electrical interlocking IVE unit G-5
Controller installation G-6
Associated controllers G-7
BA controller G-8
UA controller G-9

G

Other chapters

Select your circuit breakers and switch-disconnectors A-1
Select your MicroLogic X control unit B-1
Customize your MicroLogic X with digital modules C-1
Customize your circuit breaker with accessories D-1
Integrate in Smart panels - Architecture and systems E-1
Integrate in switchboard F-1
Services H-1
Order your circuit breaker I-1

Presentation

PB191613-50.eps

65587-117.eps

In installations requiring a high level of availability two redundant power supplies are generally used. The main supply can at any time be replaced by an emergency supply in case of power interruption. The replacement source can be an emergency power generator set or another low voltage network.
In complex low voltage architectures, up to three independent power supplies may be used to secure the installation. More than three independent sources can even be used for specific applications.
Changeover systems are required to quickly and safely switch between the power sources.
There are three ways to switch between the sources:

- manually
- automatically
- remotely

Manual source-changeover system or M: Manual Transfer Switching Equipment

The simplest way to switch between the power sources. The closing and opening operations of the circuit breakers or switches are performed by the operators.
The time required to switch between the sources is variable.

System

Two or three mechanically interlocked circuit breakers or switch-disconnectors.

Applications

Small commercial buildings and small and medium industrial activities where the need for continuity of service is significant but not a priority.

Automatic source-changeover system or A: Automatic Transfer Switching Equipment

A controller is added to automatically control the switching operations. This can be done using the standard BA, UA controllers and the associated IVE electrical interlocking unit. The solution is limited to two circuit breakers or two switch-disconnectors.
The automatic switching sequence is initiated by detecting the loss of the power supply. It can also be initiated by the operators.

System

Two mechanically interlocked circuit breakers or switch disconnectors, associated with one BA or UA controller and the IVE electrical interlocking unit.

Applications

Large infrastructures.

Mechanical interlocking

Schneider Electric offers source change-over systems based on MasterPact MTZ devices.
They are made of up to 3 circuit breakers or switch-disconnetors linked by an electrical interlocking system that may have different configurations. Moreover, a mechanical interlocking system must be added to protect against electrical malfunctions or incorrect manual operations. In addition, a controller can be used to automatically control the source transfer.
The following pages present the different solutions for mechanical and electrical interlocking and associated controllers.

For implementing the mechanical interlocking 2 different possibilities are offered:
- interlocking with rods
- interlocking with cables

Interlocking of two devices using connecting rods

The two devices must be installed one above the other.
For Masterpact MTZ1 only associations between similar type devices are allowed (2 fixed or 2 drawout devices).
Mixed associations between Masterpact MTZ1 and Masterpact MTZ2 or MTZ3 devices of different types (fixed or drawout) are possible.
For MasterPact MTZ2 and MTZ3, all mixed associations between fixed type and drawout type devices are possible.

Installation

This function requires:
- an adaptation fixture on the right side of each circuit breaker or switch-disconnector
- a set of connecting rods with no-slip adjustments
- a mechanical operation counter CDM (mandatory)

The adaptation fixtures, connecting rods, circuit breakers and switch-disconnectors are supplied separately, ready for assembly by the customer.
The maximum vertical distance between the fixing plates is 900 mm.

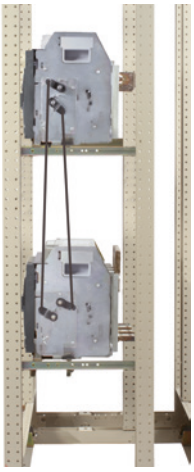

Interlocking of two MasterPact MTZ1 or MTZ2 / MTZ3 circuit breakers using connecting rods

Interlocking of two or three devices using cables

For cable interlocking, the circuit breakers can be installed either one above the other or side-by-side.
All mixed associations between MasterPact MTZ1, MTZ2, MTZ3 fixed type and drawout type devices are possible.

Interlocking between two MasterPact MTZ1, MTZ2, MTZ3 devices

This function requires:
- an adaptation fixture on the right side of each device
- a set of cables without slip adjustments
- a mechanical operation counter CDM (mandatory)

The maximum distance between the fixing planes (vertical or horizontal) is 2000 mm.

Interlocking between three MasterPact MTZ1, MTZ2, MTZ3 devices

This function requires:
- a specific adaptation fixture installed on the right side of each device
- two sets of cables without slip adjustments
- a mechanical operation counter CDM (mandatory)

The maximum distance between the fixing planes (vertical or horizontal) is 1000 mm.

Installation

The adaptation fixtures, sets of cables and circuit breakers or switch-disconnectors are supplied separately, ready for assembly by the customer.
Installation conditions for cable interlocking systems:
- cable length: 2.5 m
- cable bending radius: greater than 100 mm
- maximum number of curves: 3.

Note: for cable length higher than 2.5 m please consult us before ordering the circuit breakers for a customised solution.

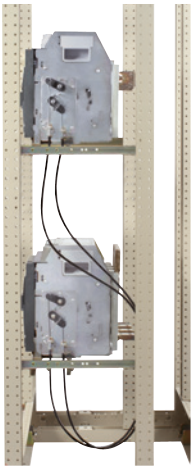

Interlocking of two MasterPact circuit breakers using cables

Choice criteria

In the applications where the continuity of service is critical(*) (Data Centers, airports, hospitals, marine, oil&gas, process industry, …) the mechanical interlocking by rods and the drawout version devices is strongly recommended.

Mechanical interlocking by rods is preferred as less energy is consumed by friction, so it has less effect on the circuit breaker closing energy.
In terms of breaker mounting type, the drawout version is preferred as :
- it provides mechanical isolation of the circuit breaker from possible external stress on the terminals by having a flexible connection at the clusters level
- it allows simple and total access for periodic maintenance
- it allows quick replacement of the device if necessary.

When not possible, cable interlocking or fixed versions can be used, but the installation rules detailed in the 2 sections below must be strictly respected and mainly:
- the busbars or the cables used for the power connections must apply no stress on the circuit breakers terminals. Their weight must be supported by the switchboard frame.

[1] For more details please contact your local support.

- Please refer to the “Switchboard integration - Installation rules – Power connection” section in this catalog as well as to the Data Bulletin “Installation of Fixed MasterPact NW Circuit Breakers in Electrical Equipment – Class 0613” available on www.schneider-electric.com for more details.

Mechanical interlocking

Possible association between MasterPact MTZ1, MTZ2, MTZ3

Key interlocking

Interlocking using keylocks is very simple and makes it possible to interlock two or more devices that are physically distant or that have very different characteristics.

Interlocking system

Each device is equipped with an identical keylock and the key is captive on the closed (ON) device. A single key is available for all devices. It is necessary to first open (OFF position) the device with the key before the key can be withdrawn and used to close another device.
A system of wall-mounted captive key boxes makes a large number of combinations possible between many devices.

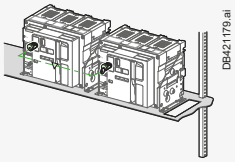

Mechanical interlocking using connecting rods

MasterPact MTZ1:
2 MasterPact MTZ1 fixed type or drawout type. Association between fixed type and drawout type MTZ1 devices is not possible nor combinations between MTZ1 and MTZ2 or MTZ3.

MasterPact MTZ2 and MTZ3:
All mixed associations between fixed type and drawout type devices are possible.

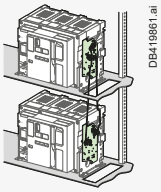

Mechanical interlocking by cables

All mixed associations between MasterPact MTZ1, MTZ2, MTZ3 fixed type and drawout type devices are possible.

Note: 3 devices mechanical interlocking is applicable only to MTZ2 and MTZ3.

Vertical	Horizontal
2 devices MTZ1 - MTZ2 - MTZ3	
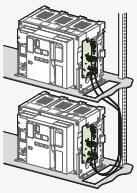 DB419862.ai	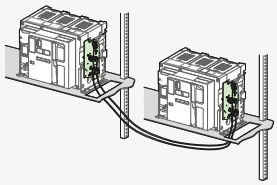 DB419864.ai
3 devices MTZ2 - MTZ3	
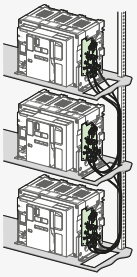 DB419863.ai	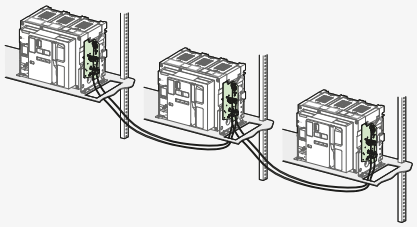 DB419865.ai

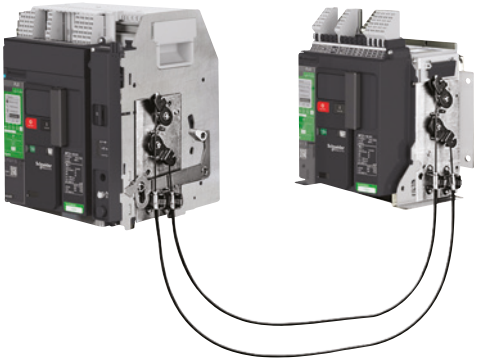

G

Electrical interlocking IVE unit

IVE electrical interlocking unit

Electrical interlocking between MasterPact MTZ1,MTZ2, and MTZ3 circuit breakers can be done using the IVE Electrical interlocking unit or using dedicated wiring. The IVE unit is suitable for two circuit breakers or two switch-disconnectors only. For three devices, dedicated wiring is required to perform the electrical interlocking.

Characteristics of the IVE unit

- ■ external connection terminal block:
  - □ **inputs:** status of the SDE contacts on the “N” and “R” source circuit breakers
  - □ **output:** circuit breaker control signals
- ■ two connectors for the two “N” and “R” source circuit breakers:
  - □ **inputs:** - Status of the OF contacts on each circuit breaker (ON or OFF) - Status of the SDE contacts on the “N” and “R” source circuit breakers
  - □ **outputs:** power supply for operating mechanisms
- ■ control voltage:
  - □ 24 to 250 V DC
  - □ 48 to 415 V 50/60 Hz - 440 V 60 Hz.

The IVE unit control voltage must be same as for the circuit breaker operating mechanisms.

Necessary equipment for MasterPact MTZ1, MTZ2, MTZ3, each circuit breaker must be equipped with:

- ■ a remote-operation system made up of:
  - □ MCH gear motor
  - □ MX or MN opening voltage release
  - □ XF closing voltage release
  - □ PF ready-to-close contact
  - □ CDM mechanical operation counter
- ■ an available OF contact
- ■ one to three CE connected-position contacts (carriage switches) on drawout circuit breakers (depending on the installation).

DB419709.ai

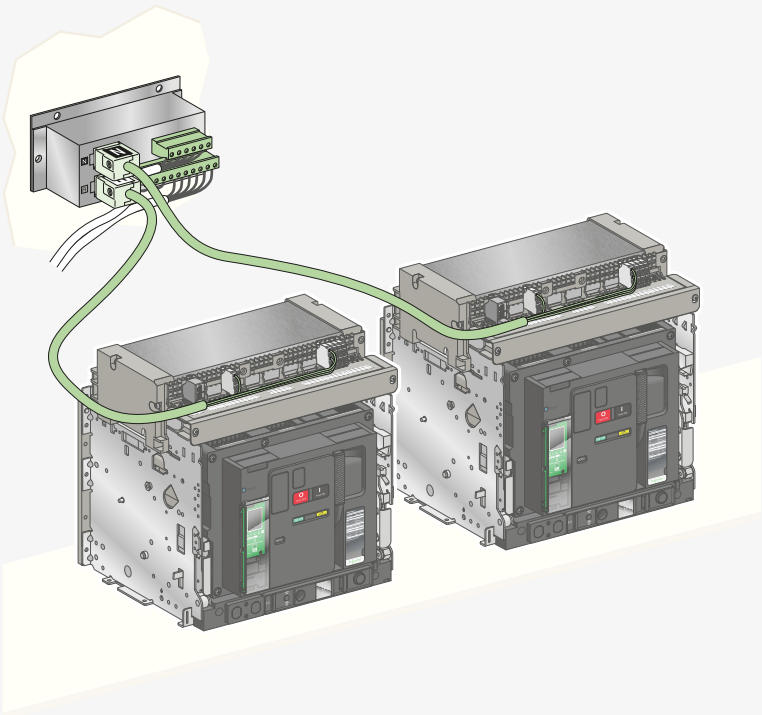

Note: After either manual or fault tripping the manual acknowledgement of the circuit breaker is required.

PB119174.eps

1 normal source - 1 replacement source

DB419718.ai

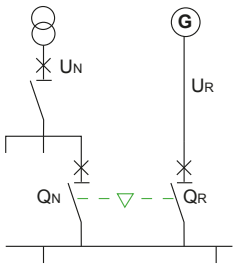

QN	QR
0	0
1	0
0	1

2 sources with coupler on busbars

DB419719.ai

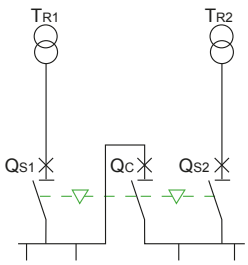

QS1	QC	QS2
0	0	0
1	0	1
1	1	0
0	1	1
1	0	0 [1]
0	0	1 [1]

[1] possible by forcing operation

2 normal sources - 1 replacement source

DB419720.ai

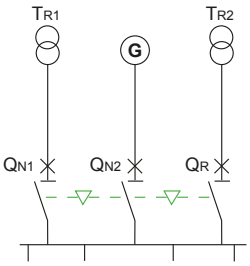

QN1	QN2	QR
0	0	0
1	1	0
0	0	1
1	0	0
0	1	0

G

Controller installation

PB100857_SE.eps

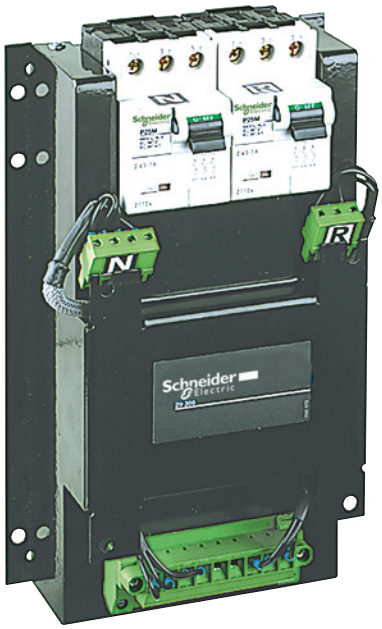

ACP control plate

The control plate provides in a single unit:
- protection for the BA or UA controller with two highly limiting P25M circuit breakers (infinite breaking capacity) for power drawn from the AC source
- control of circuit breaker ON and OFF functions via two relay contactors
- connection of the circuit breakers to the BA or UA controller via a built-in terminal block.

Control voltages

- 110 V 50/60 Hz.
- 220 to 240 V 50/60 Hz.
- 380 to 415 V 50/60 Hz and 440 V 60 Hz.

The same voltage must be used for the ACP control plate, the controller and the circuit breaker operating mechanisms.

Installation

Connection between the ACP control plate and the IVE unit may use:
- wiring done by the installer
- prefabricated wiring (optional)

Installation of the BA and UA controllers

The BA and UA controllers may be installed in one of two manners:
- directly mounted on the ACP control plate
- mounted on the front panel of the switchboard
- if the length of the connection between the controller and the control plate (ACP) is less than or equal to 1 m, the connecting cable ref. 29368 can be ordered as an optional extra. Cables longer than 1 m, but not longer than 2 m will be the responsibility of the installer.

DB419723.ai

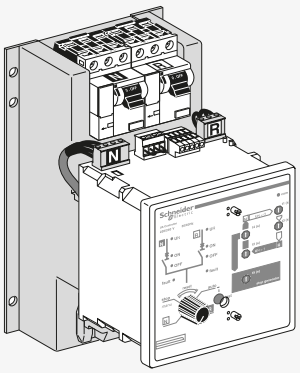

Mounting on the ACP control plate

DB419724.ai

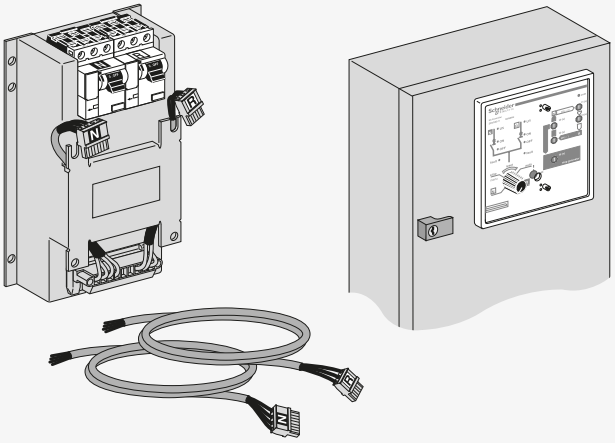

Mounting on the front panel of the switchboard

Associated controllers

By combining a remote-operated source-changeover system with an integrated BA or UA automatic controller, it is possible to automatically control source transfer following user-selected sequences. These controllers can be used on source-changeover systems that include two circuit breakers or switch-disconnectors.
For source-changeover systems that include three circuit breakers, the automatic control diagram must be prepared by the installer as a complement to diagrams provided in the “electrical diagrams” section of this catalog.

Controller		BA	UA
4-position switch			
Automatic operation		●	●
Forced operation on “Normal” source		●	●
Forced operation on “Replacement” source		●	●
Stop (both “Normal” and “Replacement” sources off)		●	●
Automatic operation			
Monitoring of the “Normal” source and automatic transfer		●	●
Generator set startup control			●
Delayed shutdown (adjustable) of generator set			●
Load shedding and reconnection of non-priority circuits			●
Transfer to the “Replacement” source if one of the phases of the “Normal” source is absent			●
Test			
By opening the P25M circuit breaker supplying the controller		●	
By pressing the test button on the front of the controller			●
Indications			
Circuit breaker status indication on the front of the controller: on, off, fault trip		●	●
Automatic mode indicating contact		●	●
Other functions			
Selection of type of “Normal” source (single-phase or three-phase) [1]			●
Voluntary transfer to “Replacement” source (for example, energy management commands)		●	●
During peak-tariff periods (energy management commands) forced operation on “Normal” source if “Replacement” source not operational			●
Additional contact (not part of controller) Transfer to “Replacement” source only if contact is closed (for example, used to test the frequency of UR).		●	●
Setting of maximum startup time for the replacement source			●
Power supply			
Control voltages [2]	110 V 50/60 Hz	●	●
	220 to 240 V 50/60 Hz	●	●
	380 to 415 V 50/60 Hz and 440 V 60 Hz	●	●
Operating thresholds			
Undervoltage	0.35 Un ⩽ voltage ⩽ 0.7 Un	●	●
Phase failure	0.5 Un ⩽ voltage ⩽ 0.7 Un		●
Voltage presence	voltage ⩾ 0.85 Un	●	●
IP degree of protection (EN 60529) and IK degree of protection against external mechanical impacts (EN 50102)			
Front	IP40	●	●
Side	IP30	●	●
Connectors	IP20	●	●
Front	IK07	●	●
Characteristics of output contacts (dry, volt-free contacts)			
Rated thermal current (A)	8		
Minimum load	10 mA at 12 V		
Output contacts	Position of the Auto/Stop switch	●	●
	Load shedding and reconnection order		●
	Generator set start order		●

		AC				DC	
Utilisation category (IEC/EN 60947-5-1)		AC-12	AC-13	AC-14	AC-15	DC-12	DC-13
Operational current (A)	24 V	8	7	5	5	8	2
	48 V	8	7	5	5	2	-
	110 V	8	6	4	4	0.6	-
	220/240 V	8	6	4	3	-	-
	250 V	-	-	-	-	0.4	-
	380/415 V	5	-	-	-	-	-
	440 V	4	-	-	-	-	-
	660/690 V	-	-	-	-	-	-

DB403809.eps

DB403810.eps

[1] For example, 220 V single-phase or 220 V three-phase.
[2] The controller is powered by the ACP control plate.
The same voltage must be used for the ACP plate, the IVE unit and the circuit breaker operating mechanisms. If this voltage is the same as the source voltage, then the “Normal” and “Replacement” sources can be used directly for the power supply. If not, an isolation transformer must be used.

BA controller

The BA controller is used to create simple source-changeover systems that switch from one source to another depending on the presence of voltage U_N on the “Normal” source.
It is generally used to manage two permanent sources and can control ComPact NS, ComPact NSX and MasterPact MTZ circuit breakers and switch-disconnectors.

DB403841.eps

DB403838.eps

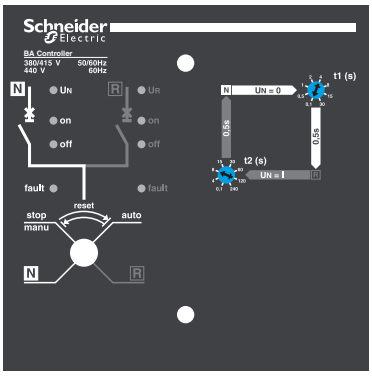

Front of the BA controller

Operating modes

A four-position switch can be used to select:
- automatic operation
- forced operation on the “Normal” source
- forced operation on the “Replacement” source
- stop (both “Normal” and “Replacement” sources off)

Setting the time delays

Time delays are set on the front of the controller.
t1. delay between detection that the “Normal” source has failed and the transmission of the order to open the “Normal” source circuit breaker (adjustable from 0.1 to 30 seconds).
t2. delay between detection that the “Normal” source has returned and the transmission of the order to open the “Replacement” source circuit breaker (adjustable from 0.1 to 240 seconds).

Circuit breaker commands and status indications

The status of the circuit breakers is indicated on the front of the controller.
- ON, OFF, fault.

A built-in terminal block can be used to connect the following input/output signals:
- inputs:
  - voluntary order to transfer to “Replacement” source (for example, for special tariffs, etc.)
  - additional control contact (not part of the controller). Transfer to the “Replacement” source takes place only if the contact is closed (for example, used to test the frequency of U_R, etc.)
- outputs:
  - indication of operation in automatic or stop mode given by changeover contacts.

Test

It is possible to test the operation of the BA controller by turning OFF (opening) the P25M circuit breaker for the “Normal” source and thus simulating a failure of voltage U_N.

G

UA controller

The UA controller is used to create a source-changeover system integrating the following automatic functions:
- transfer from one source to another depending on the presence of voltage U_N on the “Normal” source
- startup of an engine generator set
- shedding and reconnection of non-priority circuits
- transfer to the “Replacement” source if one of the phases on the “Normal” source fails.

The UA controller can control ComPact NS, ComPact NSX and MasterPact MTZ devices.

Operating modes

A four-position switch can be used to select:
- automatic operation
- forced operation on the “Normal” source
- forced operation on the “Replacement” source
- stop (both “Normal” and “Replacement” sources off, then manual operation)

Setting the time delays

Time delays are set on the front of the controller.
t1. delay between detection that the “Normal” source has failed and the transmission of the order to open the “Normal” source circuit breaker (adjustable from 0.1 to 30 seconds).
t2. delay between detection that the “Normal” source has returned and the transmission of the order to open the “Replacement” source circuit breaker (adjustable from 0.1 to 240 seconds).
t3. delay following opening of Q_N with load shedding and before closing of Q_R (adjustable from 0.5 to 30 seconds).
t4. delay following opening of Q_R with load reconnection and before closing of Q_N (adjustable from 0.5 to 30 seconds).
t5. delay for confirmation that U_N is present before shutting down the engine generator set (adjustable from 60 to 600 seconds).
t6. delay before startup of the engine generator set (120 or 180 seconds).

Commands and indications

Circuit breaker status indications on the front of the controller:
- ON, OFF, fault.

A built-in terminal block can be used to connect the following input/output signals:
- inputs:
  - voluntary order to transfer to “Replacement” source (for example, for special tariffs, etc.)
  - additional control contact (not part of the controller). Transfer to the “Replacement” source takes place only if the contact is closed (for example, used to test the frequency of U_R, etc.)
- outputs:
  - control of an engine generator set (ON / OFF)
  - shedding of non-priority circuits
  - indication of operation in automatic mode given by changeover contacts.

Distribution-system settings

Three switches are used to:
- select the type of “Normal” source, whether single-phase or three-phase (for example, 240 V single-phase or 240 V three-phase)
- select whether to remain on the “Normal” source if the “Replacement” source is not operational during operation on special tariffs
- select the maximum permissible startup time for the engine generator set during operation on special tariffs (120 or 180 seconds).

Test

A pushbutton on the front of the controller can be used to test the transfer from the “Normal” source to the “Replacement” source, then to test the return to the “Normal” source. The test lasts approximately three minutes.

DB403842.eps

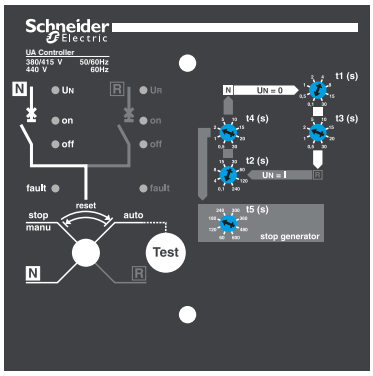

Front of the UA controller

DB403837.eps

G

H

Services

Services overview.....H-2
Associated services H-3
Life cycle services H-4
Digital services.....H-8

H

Other chapters

Select your circuit breakers and switch-disconnectors.....A-1
Select your MicroLogic X control unit.....B-1
Customize your MicroLogic X with digital modules.....C-1
Customize your circuit breaker with accessories.....D-1
Integrate in Smart panels - Architecture and systems E-1
Integrate in switchboard F-1
Integrate in special applications - Source-changeover systems.....G-1
Order your circuit breaker..... I-1

Services overview

The ultimate in life cycle support for all your installations
Electrical distribution equipment lies at the heart of the industry business, powering the machines and key processes. Circuit breakers with associated protection relays and trip units are vital to help ensure the safety of people and security of assets. When they fail unexpectedly, the risk of dramatic situations arises.
Implementing an effective services strategy for your electrical distribution installation is therefore crucial for your business.
Experienced engineers and qualified field service representatives are committed to provide you with innovative solutions, best-in-class customer service, and advanced technical support.
Schneider Electric Field Services helps you manage your Electrical Distribution equipment throughout its life cycle.

DB421636.ai

Life Cycle Services

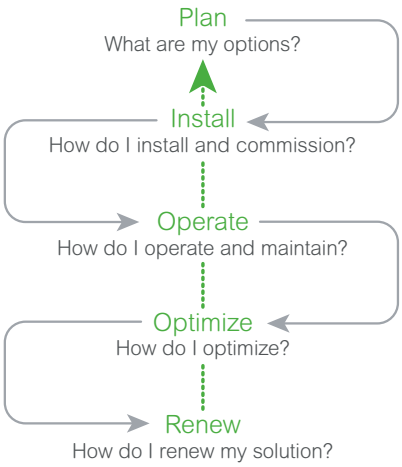

Get peace of mind thanks to MasterPact MTZ associated services when purchasing your circuit breaker

> On site assistance to commissioning & start up
> 3/5 years warranty period
> E-learning program

Technicien_V.eps

Optimize your electrical distribution with Schneider Electric Life Cycle services

> OnSite Asset Diagnostic
> OnSite Preventive maintenance
> OnSite Repair
> ECOFIT™ Masterkit and Plug&Play MasterPact MTZ solution

2S7C4708.eps

Manage & maintain your installation using digital services: permanent data monitoring of your equipment

> Condition-based maintenance
> EcoStruxure Asset Advisor services

Peace of mind thanks to associated services

Assistance to commissioning and start up

Schneider Electric assistance and supervision of commissioning and start-up allows you to ensure the first phase of the life cycle of your electrical installation is fully implemented in compliance with relevant standards and Schneider Electric safety procedures:

- check of product installation, perform environmental and visual inspection
- perform functional verification before operation
- setting of protection functions based on data provided by end user
- perform start-up assistance
- ensure operating & maintenance documentation is compliant
- Schneider Electric supervision of installation & commissioning site work report.

3/5 years warranty period

With the Schneider Electric 3/5 years warranty period, you can be certain that in the case of an unexpected event, your product will be repaired or replaced quickly, minimizing downtime.
Two options are offered to meet your business requirements and criticality of your installation:

- 3-years warranty period
- 5-years warranty period including one visit for Onsite Asset Diagnostic in the fifth year.

The Schneider Electric warranty includes:

- product replacement or repair
- on-site labor costs and travel costs for product exchange or repair, according to Schneider Electric commercial conditions.

The warranty is applicable when the product is installed and operated following Schneider Electric product recommendations.

e-Learning program:
Get ready to operate & maintain your MasterPact MTZ!

Learn how to make the most of your MasterPact MTZ!
Content:

- friendly format synthesizing how to commission, operate and maintain your MasterPact MTZ.
- trainee gets the key to understand the potential of MasterPact MTZ as digital services enabler.
- Schneider Electric delivers a completion certificate at the end of the quiz.
- training manuals are provided as well, with recommended maintenance procedures.

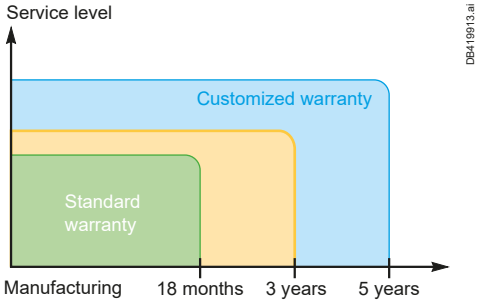

"Get ready to operate and maintain your MasterPact MTZ" e-Learning program available:

"Arc flash prevention" e-Learning program is available:

"Electrical Crisis Management" e-Learning program is available:

H

Life cycle services

Achieve the highest performance with Schneider Electric maintenance services throughout the life cycle of your equipment.
Schneider Electric helps you to:
- Reduce unscheduled downtime by maintaining your installation in the right operating conditions
- Maximize lifetime of your equipment
- Increase operation efficiency with a high level of safety.

Adopt the right maintenance strategy according to equipment criticality

Optimize your operating costs using the appropriate maintenance

Schneider Electric offers four levels of maintenance:

- OnSite Repair
- OnSite Preventive Maintenance
- OnSite Condition Maintenance including OnSite Asset Diagnostic (ProDiag)
- Condition-based maintenance with permanent equipment monitoring (EcoStruxure Asset Advisor)

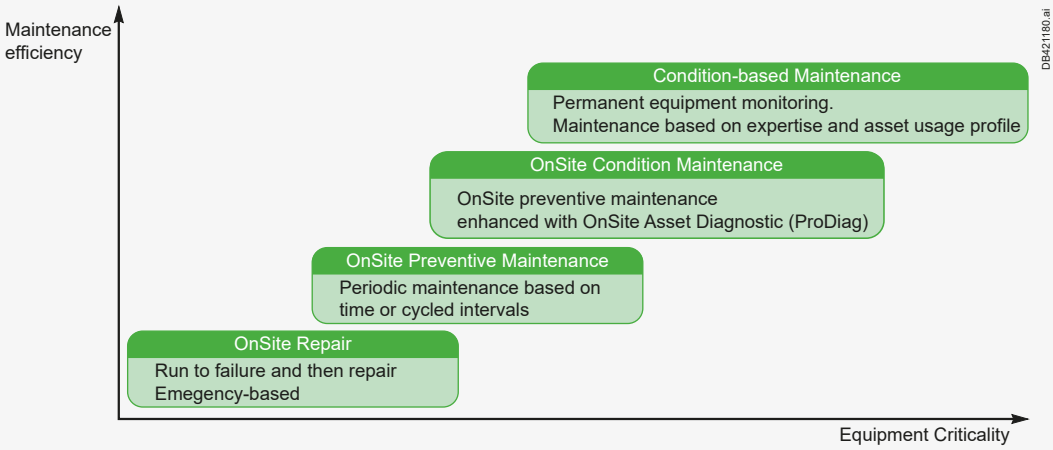

OnSite Repair

This is the Schneider Electric Services corrective maintenance based on on-site interventions to repair or replace inoperable devices and restore the equipment with expected level of performance.

Recommended spare parts kit

Schneider Electric Services supply original spare parts for your MasterPact MTZ. Recommended spare parts kits:
- Commissioning
- 3-year operation

Functions		Recommended for Commissioning	Recommended for 3 years of operation
Closing voltage release		●	●
Opening voltage release		●	●
Auxiliary contacts	ON / OFF	●	●
	Fault indication	●	●
	Connected / Disc. / Test	●	●
	Ready to close	●	●
Motorization	Gear motor	○	●
	Terminal block	●	○
MicroLogic cover		●	○
Escutcheon transparent cover		●	○
Auxiliary terminals	Terminal block	●	○
	Jumpers	●	●

OnSite Preventive maintenance

This is the Schneider Electric Services preventive maintenance carried out in either of the following cases:
- At predetermined frequency in accordance with established time intervals but without previous condition investigation.
- At customized frequency in accordance with product usage and with Schneider Electric Services recommendations. This time-based maintenance is intended to reduce the probability of failure or the degradation of the equipment. It is recommended for processes with low criticality and is performed during a scheduled shutdown. In addition, to benefit from the full capability of MasterPact MTZ new firmware, Schneider Electric Services provide any upgrade of your complete system.

OnSite Asset Diagnostic
To provide maximum care for your electrical distribution equipment, your maintenance strategy should be completed by OnSite Asset Diagnostic. Regular on-site diagnostics enables to identify symptoms of an undetected malfunction or degradation before a fault occurs. The performance of the equipment is therefore maintained at its optimum level.

OnSite Condition maintenance

OnSite Condition Maintenance is the Manufacturer preventive maintenance program.
It includes:
- functional checks, condition checks, cleansing, greasing
- inspection and testing,
- OnSite Asset Diagnostic (ProDiag)

OnSite Asset Diagnostic (ProDiag)

Schneider Electric proposes a comprehensive diagnostic program dedicated to low voltage air circuit breakers:
- ProDiag Trip Unit
- ProDiag Breaker
- ProDiag Clusters

ProDiag Trip Unit

Diagnose circuit breaker tripping capability.

- **How:** checking configuration settings, tripping times data and alarms and events history to determine pass or not technical specifications
- **Method:** proprietary diagnostic methodology (procedure with secondary injection, advanced tools and expertise)
- **Job type:** Intrusive with shutdown.

ProDiag Breaker

Diagnose circuit breaker electro-kinematic condition.

- **How:** on site testing of device electro-kinematic core features under normal and minimum voltage operating conditions to determine pass or not technical specifications.
- **Method:** proprietary diagnostic methodology replicating manufacturing quality control testing (procedure, advanced tools and expertise).
- **Job type:** intrusive with shutdown.

ProDiag Clusters

Diagnose the wearing of connection clusters not detected during the traditional preventive maintenance, resulting from an accelerated aging process caused by draw-out/in operations, severe environmental conditions, electrical stress, harsh exploitation, or uneven maintenance.

- **How:** crafted visual inspection of clusters surface condition, and its mechanical contact pressure to determine if pass or not technical specifications.
- **Method:** proprietary diagnostic methodology (procedure, advanced tools and expertise).
- **Job type:** intrusive with shutdown.

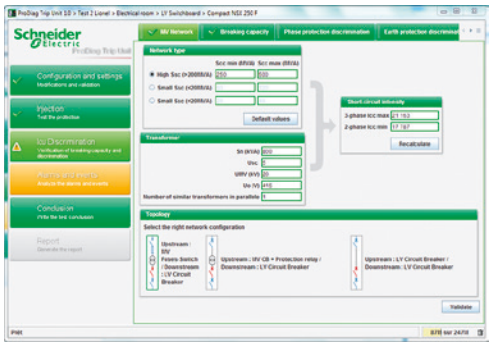

ProDiag Trip Unit - Isc

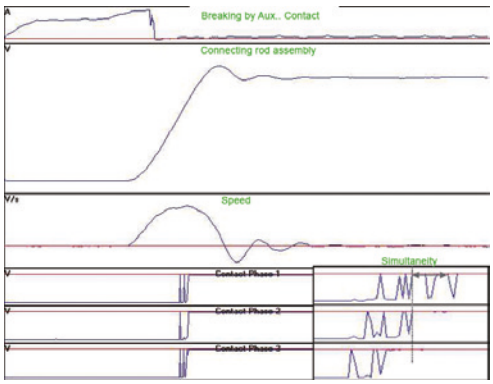

ProDiag Breaker data analysis

2S7C4428.eps

Plan for the future of your electrical distribution installation with Advantage Service Plans

While you focus on your business, Schneider Electric takes care of your assets present in your electrical distribution site. This plan improves equipment life time and energy availability. Three levels, Advantage Plus, Advantage Prime, and Advantage Ultra provide customizable best-in-class services according to both your needs and constraints. For critical sites, Schneider Electric Advantage Service plan provides scheduled maintenance and 24/7 support with an agreed response time.

- Advantage Service Plans are comprehensive service packages designed to provide customized best-in-class services at a contractual cost effective price
- Any plan can be customized by adding options or upgrades, for a duration of one to several years with an option including renewal
- Select the best and appropriate services included into your Advantage Service Plans according to:
  - Budget
  - Criticality of the installation
  - Safety
  - Electrical architecture complexity
  - Power interruptions risk prevention

- Advantage Service Plans provide the following benefits:
  - improved safety , availability and life time (on-site preventive maintenance and asset diagnostics)
  - reactivity commitment (24/7 phone support, emergency on site intervention and priority access to spare parts)
  - cost reduction and budget control (reduced downtime and critical losses, control over maintenance budget)
  - acting as a trusted advisor (maintenance by manufacturer experts, world-class maintenance practices and consistency across geographies)

Advantage Service Plans

		Advantage Plus	Advantage Prime	Advantage Ultra
OnSite preventive maintenance		◉	◉	◉
OnSite Asset diagnostics	ProDiag offers	◉	◉	◉
Corrective maintenance	24/7 technical support	◉	◉	◉
	Emergency on-site intervention	◉	◉	◉
	Cost of parts	Preferred rates	Preferred rates	◉
	Labor & travel costs	Preferred rates	◉	◉
Additional services	myField Services web portal	◉	◉	◉
	Customer training	Optional	Optional	Optional
	MPS walkthrough	Optional	Optional	Optional

H

Electrical distribution equipment modernization with ECOFIT™ MasterPact MTZ

Equipment aging increases operating costs:
- Increase in maintenance frequency
- Increase in corrective maintenance
- Availability and cost of spare parts

Schneider Electric helps you to upgrade your equipment and your installation. Increase lifetime of your installation with a cost effective solution and benefit from the latest product innovation.
ECOFIT™ Masterkit and Plug&Play MasterPact MTZ solution enables you to:
- upgrade your equipment with limitation of power interruption time.
- optimize your maintenance service costs and limit your investments
- give a boost to the electrical switchboard for efficient operation and energy management with the new MicroLogic X
- maintain compliance with evolving industry standards and legislation.
- benefit 3-years warranty including parts, on-site labor costs and travel costs according to Schneider Electric commercial conditions.

ECOFIT™ MasterPact Plug&Play

A simple solution, easy to implement for a minimum shutdown time.
It allows you to upgrade your equipment by substituting an existing MasterPact M for a MasterPact MTZ of the last generation. The MasterPact MTZ is inserted in the existing MasterPact M chassis.
- Very short on-site servicing times
- Solution particularly adapted for critical sites where shutdown time is key
- Shutdown of the entire installation is not required.
- Ideal for switchboards with no rear access
- No modification of switchboard door required
- Solution tested and complying with IEC 60947-2 standard

ECOFIT™ Masterkit

With the Masterkit offer, you have absolutely everything you need to replace an old MasterPact M

ECOFIT™ MasterPact M Masterkit brings all benefits and the enhanced features of MasterPact MTZ circuit breakers and accessories. The installation requires shut down to access to the busbars.
- No modification of power circuit connections required.
- No modification of switchboard door required (up to 3200 A).
- Solution tested and complying with IEC 60947-2 standard.

ECOFIT™ MasterPact Plug&Play

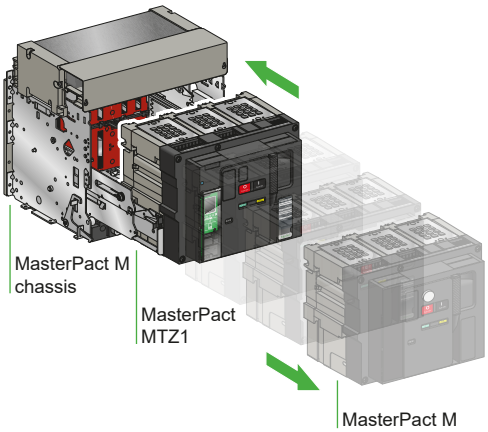

DB421314.ai

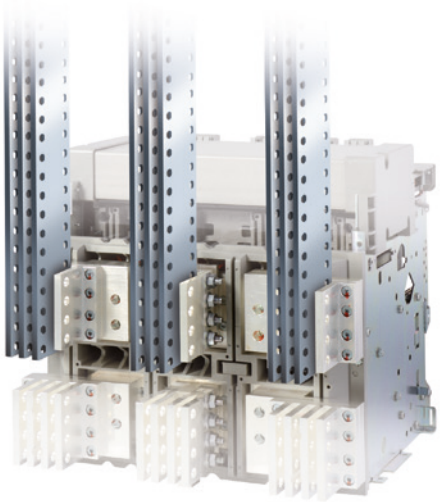

PE90455.eps

H

Digital services

DB421458.ai

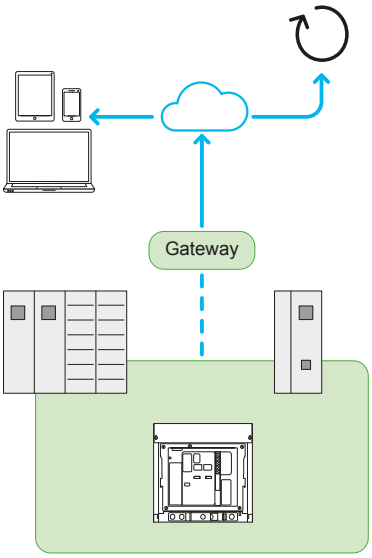

Protect your electrical installation, reducing unscheduled downtime and optimizing maintenance operations using Schneider Electric digital services.
Turn data into actionable information with Schneider Electric state of the art digital services.
Through remote data monitoring of equipment, Schneider Electric digital services proactively identify and address events inside equipment with advanced analysis and manufacturer expertise.

Asset Connect

Asset Connect helps you to upgrade your customers' electrical distribution installation with smart sensors, transforming on communicating equipment into connected assets. These upgrades open electrical installation to full spectrum of advanced capabilities, such as preventive or predictive asset performance management services.
Digital architecture indicates critical points to be monitored in MV/LV substation and provides alarm to prevent major cause of electrical installation failure.
The raw data access point could be connected to:
- Raw data access point Local SCADA
- Substation Monitoring Device (SMD)
- Cloud enabler Asset Advisor.

Digital architecture and associated sensors could be installed in new products from factory or installed in an existing installation.

PB119129.eps

EcoStruxure™ Asset Advisor Services

EcoStruxure™ Asset Advisor provides your customers with 24/7 awareness of their electrical distribution system's health. Through advanced digital capabilities and data streaming, it allows your customers to monitor, identify and address potential issues while maximizing reliability and extending equipment life.
EcoStruxure Asset Advisor combines a best-of-breed technological platform with our expertise in maintenance and electrical equipment manufacturing.
Schneider Electric Field Service Engineers provides remote technical support thanks to algorithms running on the data to mitigate the risk of electrical failure that will protect your customers' installations, people and critical processes.
It embeds Asset Performance Management, from alarm prioritization up to Asset condition monitoring leading to Condition-based maintenance work orders.
With EcoStruxure Asset Advisor Services you leverage the possibilities of IoT (Internet of Things) and digitization.

…and you benefit by:
- prioritizing capital expenditure
- optimizing operational expenditure
- benefiting from Schneider Electric technician expertise, by anticipating needs for next on site interventions.

Energy management.jpg

Power Quality Management

Also part of digital services, Energy Efficiency & Power Quality Management Services optimize energy costs, asset utilization and facility operations. MasterPact MTZ embeds specific measurements in order to support Services features as:
- detection of abnormal consumptions and parameters
- event management and performance follow-up
- expert analyses and recommendations through monthly reporting
- benchmarking when multiple sites are managed

With Schneider Electric's expertise, you get practical data and recommendations through periodic reporting that empowers you to take the right actions.

Have a first digital experience with EcoStruxure™ Facility Expert and improve the efficiency on your maintenance operations
Access automatically your MasterPact MTZ standard maintenance recommendations (normal operating conditions) by flashing the QR code. Find the QR codes on your products or on the catalog product data sheet.
Flash with EcoStruxure™ Facility Expert app.

EcoStruxure™ Facility Expert the digital maintenance tool

EcoStruxure™ Facility Expert is a digital maintenance log book that can be accessed from any smartphone, tablet, or computer and that facilitates the maintenance activities on MasterPact MTZ. This 100% collaborative, connected system keeps maintenance technicians in the field in constant contact with their maintenance community: manager, customer, contractors and peers for fast and effective interventions.

Accessible by anyone, anywhere, anytime

- EcoStruxure™ Facility Expert works on 3G, 4G and Wi-Fi networks and can also be used offline.
- Simply download the application to your smartphone or tablet, set up an account, and start the tools.

The right information fast

- Overall view of equipment (status, tasks, weekly reminders)
- Full maintenance logs (breakdowns, maintenance reports)
- Fast access to equipment maintenance history logs via QR code on the equipment
- Rich maintenance reports including voice memos, notes, photos and measurements
- Easy access to your MasterPact MTZ maintenance plan or maintenance schedule

Monitor equipment remotely and in real time

- Quickly add a new piece of equipment
- Access periodic reading measurements, recent malfunctions, etc...
- Locate equipment with a GPS in real time
- Get a reminder when you need to perform a maintenance action

Manage your maintenance teams and interventions effectively

- Real-time work order sharing and reporting with selected users.
- Get inspection reports by mail and share them in just two clicks.
- Monitor all regular operations such as scheduling and incomplete or upcoming tasks.

To download the free version of EcoStruxure™ Facility Expert, on GooglePlay:

Access to a demo of EcoStruxure™ Facility Expert:

H

H

Order your circuit breaker

Order your MasterPact MTZ through digital tools I-2

Product selector.....I-2
MasterPact MTZ Product Code.....I-4
Order your MasterPact MTZ through digital tools.....I-5
GoDigital store I-5

I

Other chapters

Select your circuit breakers and switch-disconnectors.....A-1
Select your MicroLogic X control unit.....B-1
Customize your MicroLogic X with digital modules.....C-1
Customize your circuit breaker with accessories D-1
Integrate in Smart panels - Architecture and systems E-1
Integrate in switchboard F-1
Integrate in special applications - Source-changeover systems.....G-1
Services.....H-1

Order your MasterPact MTZ through digital tools

Product selector

To simplify and expedite the ordering of MasterPact MTZ, four new tools are introduced:
■ **Product selector:** An online software tool embedded in Schneider website or in distributor´s website to help selecting the right product with its accessories.
■ **Product Code**: An alphanumeric code representing the selection of a MasterPact MTZ circuit breaker. It simplifies the way to communicate the selection of a MasterPact MTZ circuit breaker during ordering, sharing information and asking for help remotely.
■ **MySE:** online ordering plateform of Schneider for partners, offering most of our products.
■ **GoDigital store**: An online market place to purchase Digital Modules 24/7. It allows upgrading of MasterPact MTZ at anytime.

Product selector

Product Selector aims at providing a fast, secure and smart way of selecting products. It includes the selection of the basic frame, control unit, accessories and Digital Modules. Compared with the traditional way of filling up order forms or specifying customer functions, it brings the following benefits:

- Easy access: no login, direct access on Schneider website or on distributor´s website
- Reliable: compatibilities between core product and accessories are constantly tested
- Wide coverage: more than 130 ranges from Schneider are available (MasterPact, ComPact, TeSys, Acti 9, Altivar…)

Yesterday,

Ordering process of MasterPact MTZ with MyPact

new configuration

Select base unit, accessories and digital modules
↓
Save configuration and place order

repeat or modified configuration

Open existing configuration [1]
↓
Fine-tuning
↓
Save configuration and place order

[1] Existing configuration can be opened directly in the saved configurations or by entering the Product Code.

Today,

Ordering process of MasterPact MTZ with Product Selector

Non MySE partner

Select base unit, accessories and digital modules
↓
Dowload the bill of material
↓
Send it to distributors or to Schneider CCC for ordering

MySE partner [1]

Select base unit, accessories and digital modules
↓
Dowload the bill of material
↓
Upload the file in MySE and order

[1] Will be live in January 2019.

Order your MasterPact MTZ through digital tools

Product selector

Go on the range page on www.schneider-electric.com

Clic on «help me choose» and run your selection

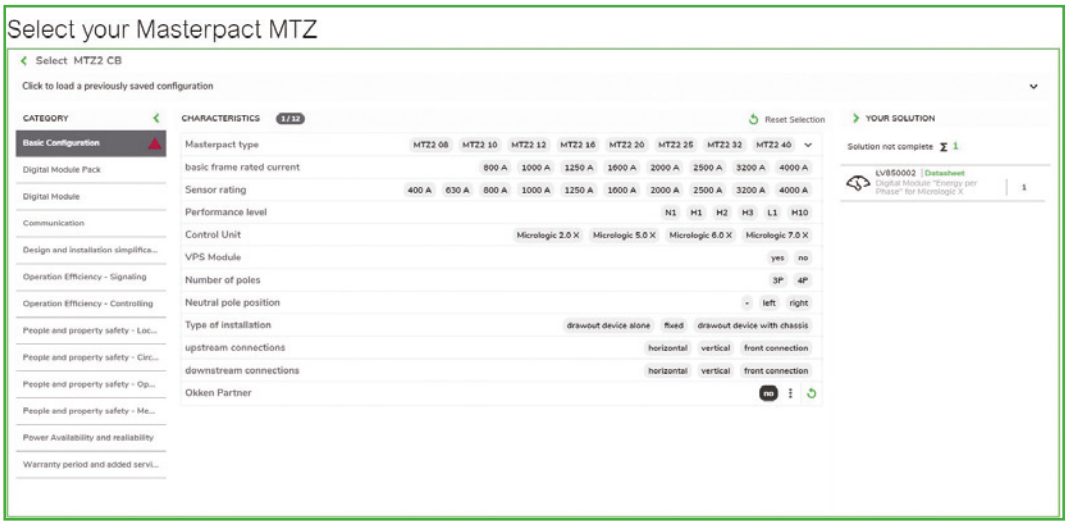

Note: All selections are encouraged to be done in Product Selector. If you have difficulties accessing or using Product Selector, contact Schneider Electric Customer Care Centre or your Schneider Electric sales representatives for more information about MTZ ordering.

Order your MasterPact MTZ through digital tools

MasterPact MTZ Product Code

MasterPact MTZ Product Code is an alphanumeric code representing the complete selection of a MasterPact MTZ circuit breaker. It will be automatically generated for each MasterPact MTZ circuit breaker after completing the selection through Product Selector. It will appear in the invoice and delivery documents as well as the labelling on the MasterPact MTZ circuit breaker and the packaging.

MasterPact MTZ Product Code brings the following benefits:

- Quick and unique identification of the initial selection of a circuit breaker can be achieved by reading the code on the physical products or
- other recordings
- Reordering of the same MasterPact MTZ circuit breaker is simplified by communicating selection through product code
- Recording or sharing information about the initial selection of a circuit breaker is simplified
- Details of the coding rules can be accessed through CCC and there are some of the highlights:
- All options of accessories are coded.
- The minimum length of the code is 9 characters and the maximum length of the code is 33* characters depending on the choice of the accessories.
- Capital letters, numbers and start sign [1] are used.

[1] The maximum length of the code may change due to future enrichment of the offer.

An example of MasterPact MTZ product code

- MasterPact type: MTZ2
- Rating: 1000A
- Sensor rating: 800A
- Performance Level: H1
- MicroLogic: 5.0 X
- VPS module: Yes
- Number of poles: 4P
- Type of installation: Drawout with chassis
- Connection: Top Horizontal Bottom Horizontal
- Type of communication: ULP + EIFE without I/O module
- Accessories for Design & Installation simplification and operation efficiency: No
- Accessories for People and Property Safety: No
- Digital Modules: Energy per phase

> Product Code: WADFEEADNA**

Yesterday

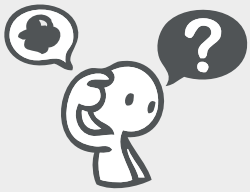

Calling CCC and try to explain all the customer functions

When you want to share information with your colleagues or Schneider Electric CCC

Today

Sending a text message through CCC app with the product code

Yesterday

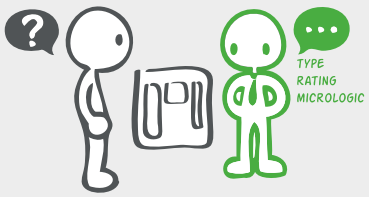

Engaging Schneider Electric Field Service to conduct an analysis

When you want to know the selection of a circuit breaker

Today

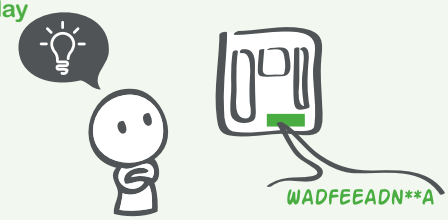

Checking the product code on the physical products

Yesterday

Fill up order form or calling Schneider Electric CCC

When you want to reorder a circuit breaker

Today

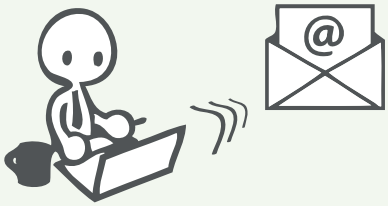

Type in the product code through Product Selector and send order

Order your MasterPact MTZ through digital tools
GoDigital store

> Go to GoDigital store

GoDigital is the Schneider Electric store that allows you to purchase Digital Modules for MasterPact MTZ control unit MicroLogic X that is already installed in the MasterPact MTZ. It provides different Digital Modules to customize your control unit with optional protection, measurement and Maintenance & diagnostics functionalities. It is open 24/7. With GoDigital store, Panel Builders have the flexibility to further customize the MicroLogic X features at last minute before commissioning the switchboard. Electrical contractors and facility managers can upgrade the install base during operational phase of product life cycle, according to new requirements, anytime, without changing the hardware or disrupting operations.

Note: Changing the protection functions among LI (MicroLogic 2.0 X), LSI (MicroLogic 5.0 X), LSIG (MicroLogic 6.0 X) and LSIV (MicroLogic 7.0 X) requires changing the MicroLogic X.

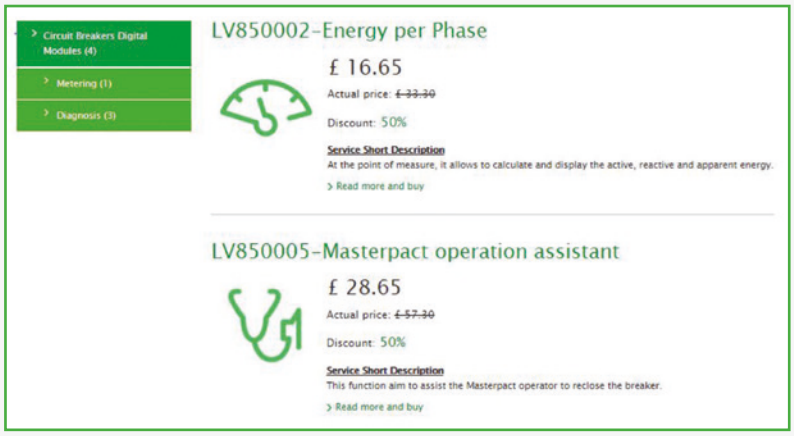

Each Digital Module purchased is delivered with a software license for a unique MicroLogic X control unit and can only be installed on that particular MicroLogic X. Therefore, the MicroLogic X control unit serial number needs to be preregistered in the GoDigital platform for the first time purchase.

For the first purchase for a particular Micorlogic X, three ways are available:

1) EcoStruxure Power Commission

When connected to MicroLogic X through either USB connection or IFE/EIFE connection, EcoStruxure Power Commission can read the unique serial number* and identify the MicroLogic X. It will also show all the available Digital Modules which are compatible with the MicroLogic X firmware version. When clicking “Buy”, it will direct the user to GoDigital store PC version with the MicroLogic X serial number automatically registered in it.

2) Ecostruxureé

When connected to MicroLogic X through either Bluetooth connection or NFC connection, Ecostruxure Power Device App will identify the MicroLogic X and proposes available Digital Modules. When clicking “Purchase”, it will direct the user to GoDigital store mobile version with the MicroLogic X serial number automatically registered in it.

3) GoDigital store PC version

In the section”My assets”, choose the serial number of the MicroLogic X to be upgraded and purchase the additional Digital Modules.

http://godigital.schneider-electric.com/

Note:
- Please note that GoDigital platform is only used to purchase Digital Modules for MicroLogic X which is already installed.
When ordering a new circuit breaker, Digital Modules are selected in Product Selector and installed in factory before delivered.
- The serial number is also printed on the faceplate of MicroLogic X

> MasterPact MTZ
Catalog numbers and spare parts

COM-POWER-LVMKT215EN

> TransferPact

LVPED216028EN

> Complementary
technical information

LVPED318033EN

> ComPact NSXm/NSX

LVPED217032EN

> Substitution guide MTZ

LVPED516027EN

> ComPact NS 630b to 3200A

LVPED211021EN

> MasterPact NT/NW

LVPED208008EN

Life Is On | Schneider Electric

Schneider Electric Industries SAS

35, rue Joseph Monier
CS 30323
92506 Rueil Malmaison Cedex
France

RCS Nanterre 954 503 439
Capital social 928 298 512 €
www.schneider-electric.com

01-19
ART. 116709

© 2019- Schneider Electric. All Rights Reserved.
All trademarks are owned by Schneider Electric Industries SAS or its affiliated companies.
Document reference: LVPED216026EN

This document has been printed on recycled paper